CHICAGO FAUCETS®
a Geberit company

2100 South Clearwater Drive
Des Plaines, IL 60018
Phone: 847-803-5000
Fax: 847-803-5454
www.chicagofaucets.com

FOR TECHNICAL ASSISTANCE
1-800-TEC-TRUE (1-800-832-8783)

ROUGH-IN

BY: JAR	DATE: 08-04-09
CHK:	REV:

FITTING NO.
305-VBXKRCF

SUBMITTED MODEL NO.

SUBMITTED AS SHOWN		SUBMITTED AS NOTED		SEE ATTACHED FOR SUBMITTED MODIFICATION	

JOB NAME

ITEM NO.

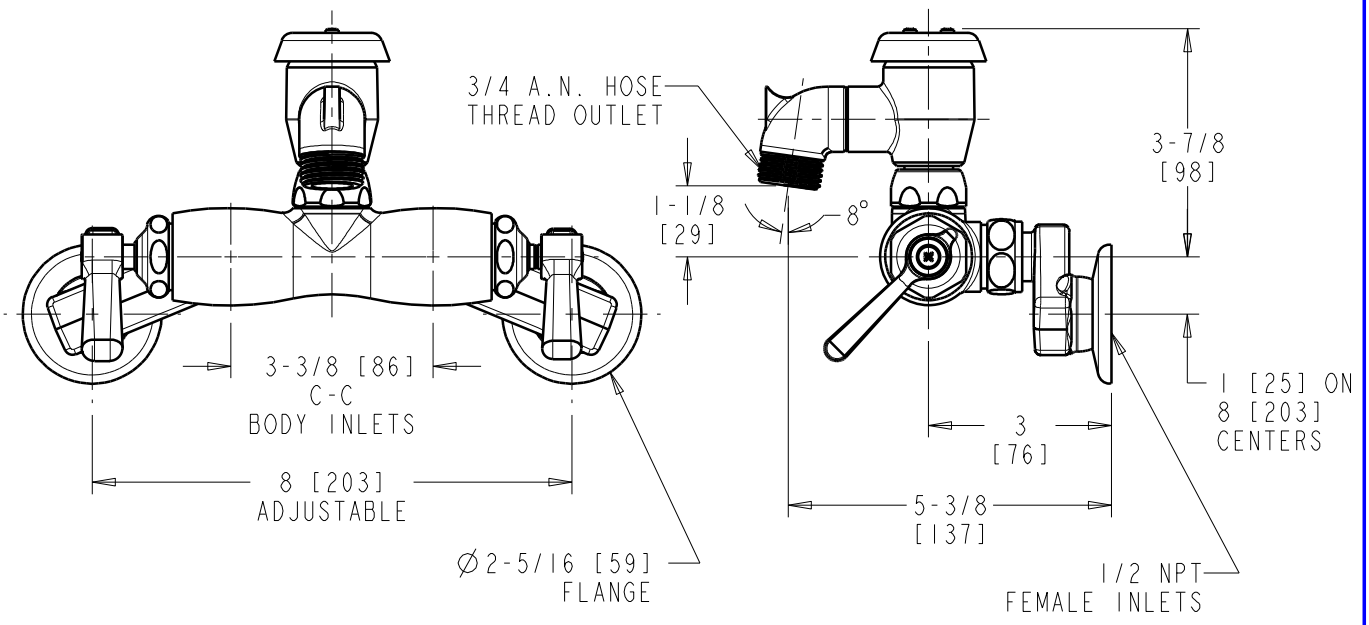

DIMENSIONS ARE IN INCHES AND [MILLIMETERS].

TECHNICAL DATA

- WALL MOUNTED SERVICE SINK FITTING
- 305-SVB SERVICE SINK VACUUM BREAKER SPOUT
- 369 INDEXED LEVER HANDLES
- CERAMIC DISC OPERATING CARTRIDGES
- 'H' 2 1/2" OFFSET INLET SUPPLY ARM
- FINISH: ROUGH CHROME

- ASME A112.18.1/CSA B125.1 COMPLIANT
- ASSE 1001 COMPLIANT

ADA COMPLIANT

ROUGHING IN DIMENSIONS MAY VARY AND ARE SUBJECT TO CHANGE. NO RESPONSIBILITY IS ASSUMED FOR USE OF SUPERCEDED OR VOIDED DATA.