CHICAGO FAUCETS®
a Geberit company

2100 SOUTH CLEARWATER DRIVE
DES PLAINES, ILLINOIS 60018-5999

FITTING NO.
895-317E29XK
SUBMITTED MODEL NO.

JOB NAME

ITEM NO.

SUBMITTED AS SHOWN	
SUBMITTED AS NOTED	
SEE ATTACHED FOR SUBMITTED MODIFICATION	

ADA COMPLIANT

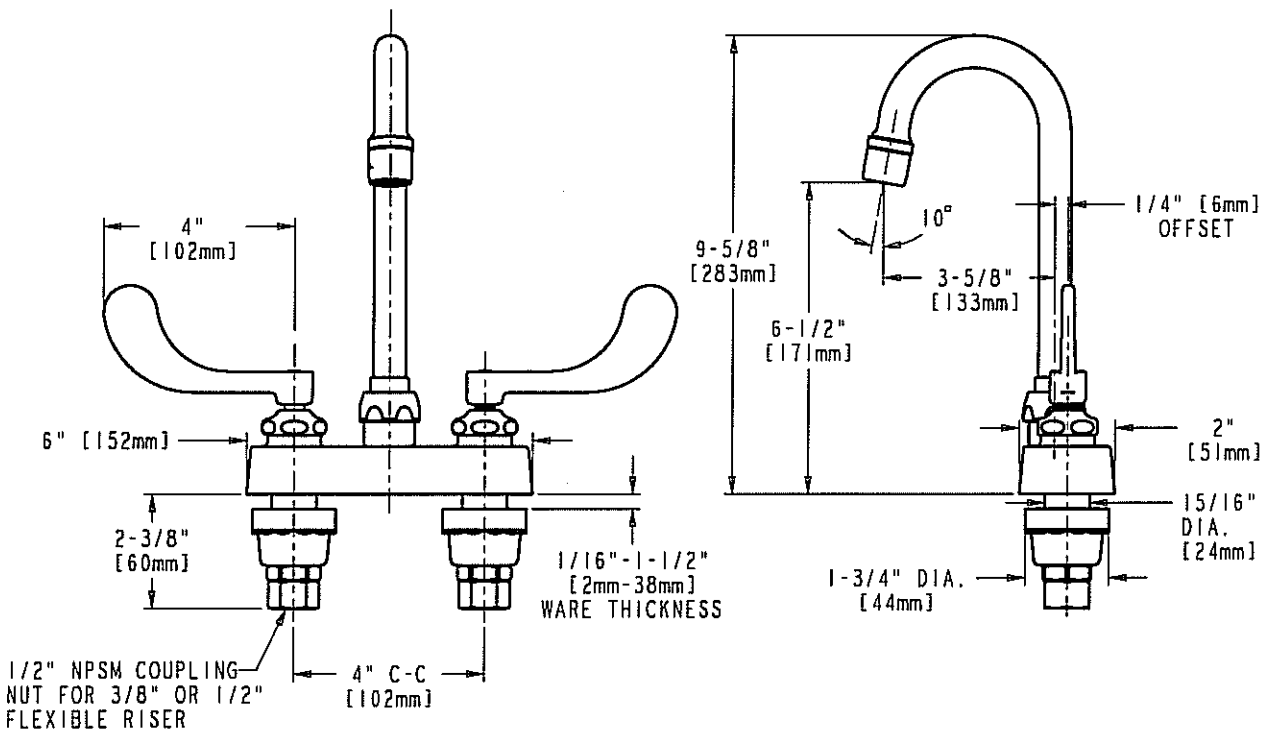

DIMENSIONS IN INCHES AND [MILLIMETERS].

TECHNICAL DATA

- DECK MOUNTED LAVATORY FAUCET
- GNIA RIGID/SWING GOOSENECK SPOUT
- 317 INDEXED WRISTBLADE HANDLES
- CERAMIC DISC CARTRIDGES
- FINISH: CHROME PLATE
- E29 LAM-A-FLO LAMINAR FLOW OUTLET
- 2.2 GPM (8.3 L/min.) MAXIMUM FLOW RATE
- ASME A112.18.1M COMPLIANT
- CSA B125 COMPLIANT
- NSF 61 COMPLIANT

DATE: 01-28-04
BY: SID
CHK'D:
APP'D: AT
REV: A

895-317E29XK

ROUGHING IN DIMENSIONS MAY VARY AND ARE SUBJECT TO CHANGE. NO RESPONSIBILITY IS ASSUMED FOR USE OF SUPERCEDED OR VOIDED DATA.