EQ Series User Guide Installation Instructions

For single supply and dual supply EQ Series faucets

CHICAGO FAUCETS®
Geberit Group

Overview

Chicago Faucets EQ Series faucets feature three designs in two finishes with heavy-duty cast brass spouts and high-quality electronic components. The faucet is up and running in minutes without the need for programming. Superior user detection means EQ turns on when user approaches and shuts off when user leaves. It also adjusts for optimal performance, saving water.

Safety Information

Read this entire user guide to ensure proper installation. Compliance and conformity to local codes and ordinances is the responsibility of the installer. The following safety notes must always be complied with during handling of this product:

- Make sure there is enough space and lighting available during installation and service.
- Do not modify or convert this Chicago Faucets product yourself. All warranties will be voided.

Notice to the Installer

- Read this entire instruction sheet before installing to ensure proper installation.
- Installation must comply with local codes and ordinances.
- Do not use pipe dope.
- Care shall be exercised when installing the device to prevent marring the exposed, decorative surfaces.

The supply piping to these devices shall be securely anchored to the building structure to prevent installed device from unnecessary movement when operated by the user.

NOTE: The information in this manual is subject to change without notice.

Installation may be performed at different times of construction by different individuals. For this reason, these instructions should be left on-site with the facility or maintenance manager.

NOTE: Before installation, turn off water supplies to existing faucet and remove faucet if replacing. Clean faucet basin and clear away debris. **Flush all supply lines before connecting to faucet.** Failure to do so can result in debris clogging the inlets and/or internal control and mixing valves.

In order to complete the installation, you will need the following tools and supplies:

- Phillips Screwdriver, #1, #2, #3
- Adjustable Wrench
- Tape Measure
- Silicone-based Lubricant
- Drill, with 3/16˝ Bit
- Mallet
- Plumbers Putty
- 1/2˝ Deep Socket or #3 Flat Head Screwdriver

Operating static pressure: 20-125 PSI (138-862 kPa)
Minimum static pressure for mixing: 30 PSI (207 kPa)
COLD water inlet temperature range: 40-80°F (4-27°C)
HOT water inlet temperature range: 100-180°F (38-82°C)
Maximum hot water range outlet from thermostatic mixing valve: 80-120°F (27-49°C)
Maximum hot water range outlet from mechanical mixing valve: 40-140°F (4-60°C)
Maximum pressure differential between Hot & Cold water supplies: 20%;
Minimum inlet water supply temperature differential: 20°F (9°C)

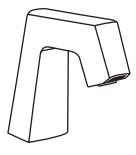

EQ Angular



EQ Curved

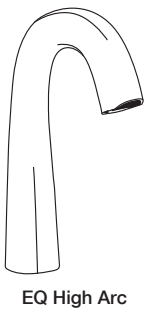

EQ High Arc

Mounting of Faucet and Optional Cover Plate

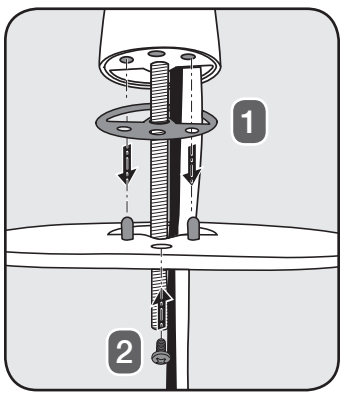

1. Install the gasket on the bottom of the spout, **flat side down**. If installing a cover plate, align the holes in the spout base with the pins on the plate, and feed the power cable and braided hose through the plate. Secure the plate to the spout with the #3 Phillips screw.

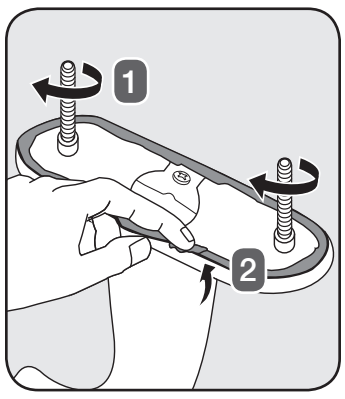

2. Attach the threaded rods to the bottom of the cover plate. Apply plumber's putty to the underside of the cover plate where shown.

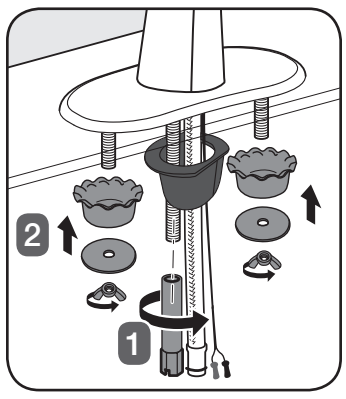

3. Position the faucet on the sink. For all installations, hand-tighten the spout to the deck with the large black spacer and long mounting nut. For installations with a cover plate, also attach the large cup washers, flat washers, and wing nuts to the threaded rods.

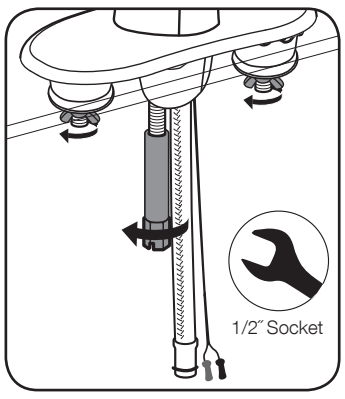

4. When the spout is in the desired position, use a wrench to tighten all mounting hardware.

Mounting Control Box

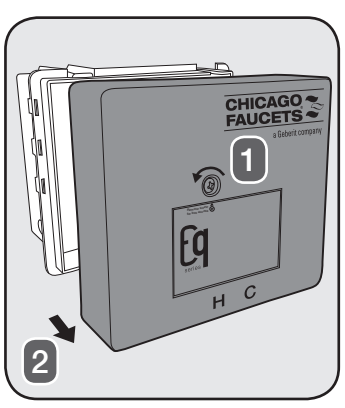

1. Remove the control box cover by using a #2 Phillips screwdriver to loosen the cover screw.

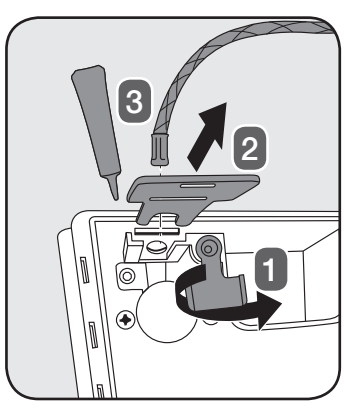

2. Pivot the yellow locking tab and remove the metal key at the top of the control box. Apply silicone-based lubricant to the end of the spout hose and insert it through the hole.

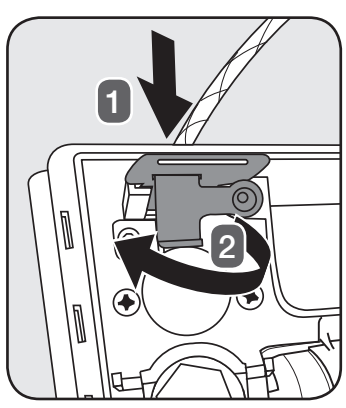

3. Be sure to seat the hose firmly before reinstalling the metal key and securing it with the yellow locking tab.

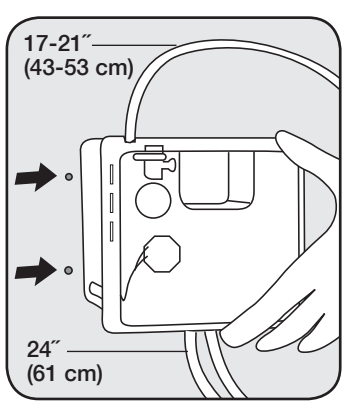

4. Determine the position of the control box under the sink. Hold the control box against the wall and mark the locations of the two mounting holes. Orientation is not critical.

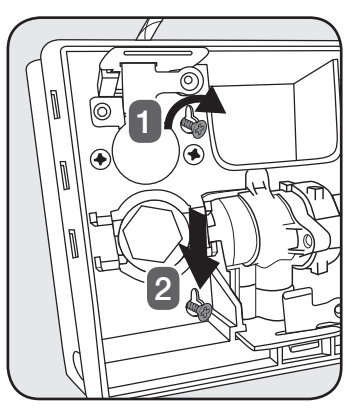

5. Drill 3/16˝ holes, install wall anchors and mounting screws. Be sure to leave at least 1/2˝ (12mm) of the screw head exposed. Secure the control box to the wall using a #2 Phillips screwdriver.

Connecting Water Supply (dual supply unit shown)

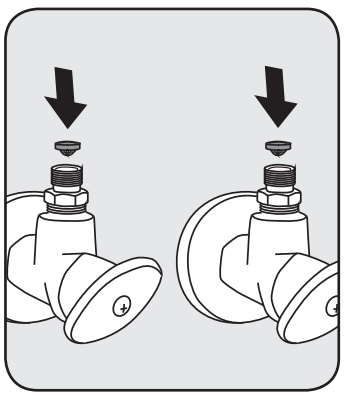

1. Insert the filter screen gaskets into the supply stops.

IMPORTANT: the filter screen gaskets seal the connection against leaks and must be installed as shown.

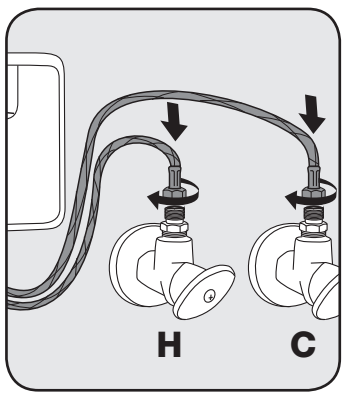

2. Attach the 3/8˝ female compression supply hoses from the control box to the supply stops. Use a wrench to tighten the nuts to the supply stops.

IMPORTANT: Remove any debris or hardware from the sink before opening the supplies and testing the faucet.

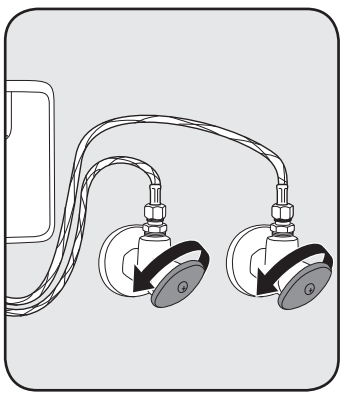

3. Open the supply stops and check for leaks. Note: water may run through spout.

Connecting Power and Solenoid

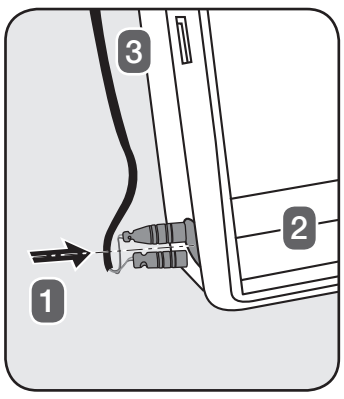

1. Bring wire into box. Use length of box for measurement. Snap into holder on side.

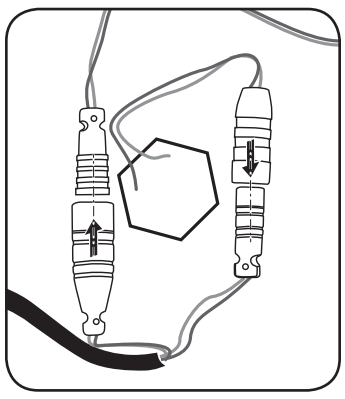

2. Attach power connections as shown in the following sections.

For additional technical assistance, call 800/TEC-TRUE (800-832-8783) or visit our website at chicagofaucets.com.

EQ Series User Guide Installation Instructions
(continued)

CHICAGO FAUCETS
Geberit Group

Battery (DC) Power

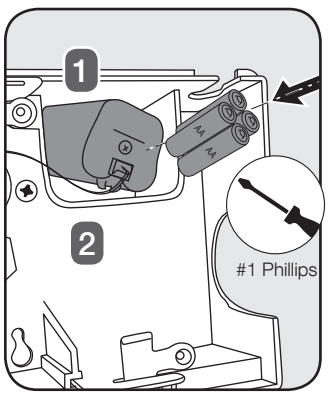

i. Open the yellow battery housing and insert 4 'AA' batteries according to the diagram inside the housing. NOTE: Make sure the batteries are oriented properly before testing the faucet.

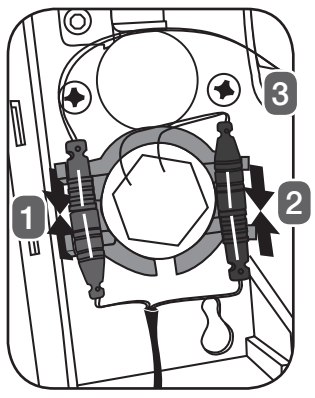

ii. Attach the wiring connectors (gray to gray, black to black). Note that the connectors are keyed for proper installation as shown in the detail below. Snap the completed connections, into the wiring harness as shown.

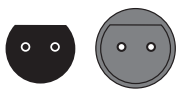

LTPS (DC) Power

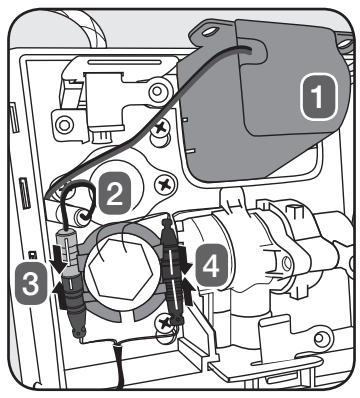

i. Insert LTPS into upper compartment of control box, aligning slots with compartment ribs. Attach LTPS adapter cable wiring connectors (green to green). First green to green, then gray to gray. Note: the connectors are keyed for proper installation.

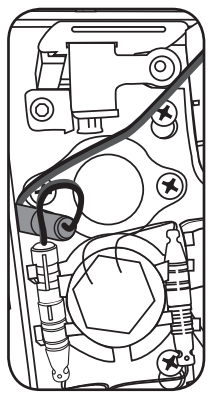

ii. Connect wiring connectors, first gray to gray, then black to black. (Note: the connectors are keyed for proper installation) Snap the completed connections, into the wiring harness as shown. Tuck the completed green connection into the space as shown.

Self Sustaining Power System (SSPS)

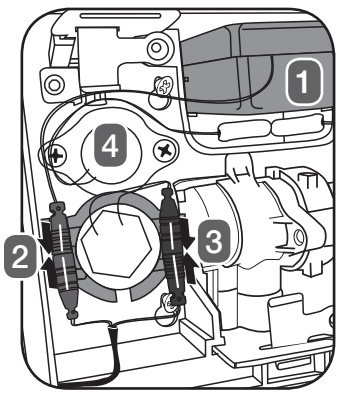

i. Insert the SSPS power supply into the upper compartment of the control box. Attach the wiring connectors, first gray to gray, then black to black. Note that the connectors are keyed for proper installation as shown in the detail below. Snap the completed connections, into the wiring harness as shown.

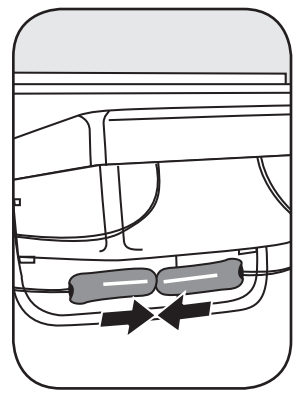

ii. Connect the blue connector on the SSPS to the blue connector on the turbine and tuck them into the cavity as shown.

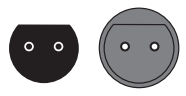

(AC) Power

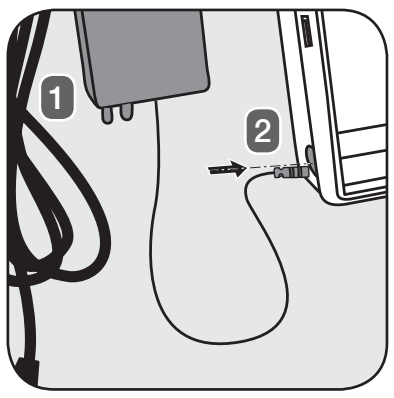

i. Choose a location and mount the transformer. Run the cable from the transformer through the opening in the control box.

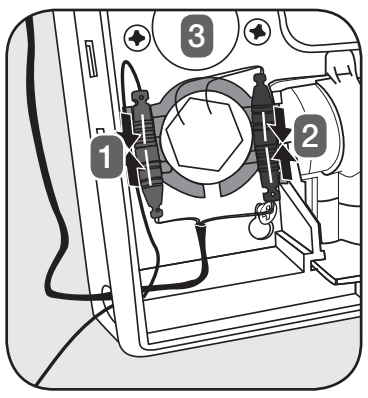

ii. Attach the wiring connectors (gray to gray, black to black). Note that the connectors are keyed for proper installation as shown in the detail below. Snap the completed connections into the wiring harness as shown.

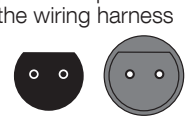

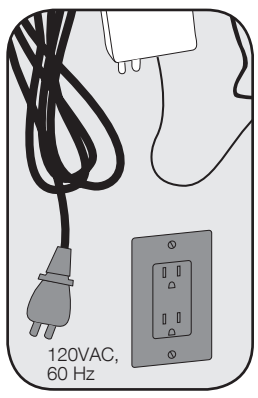

iii. Plug the transformer into the wall.

OR

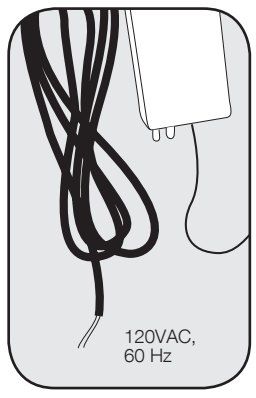

iv. Wire up the transformer to the main line.

QUICK TROUBLESHOOTING

Follow the steps below to fix common problems. For detailed troubleshooting, visit eqfaucets.com. Before troubleshooting, remove any objects in detection zone and make sure sensor is clear of debris. Ensure power is applied and solid red light appears during first 5 seconds after power-up.

The faucet is leaking:

From outlet – tighten or replace outlet insert using included key.

From supply stops – install or replace filter screen gaskets (see diagram on pg. 1).

No water flow or flow is limited:

Make sure supply hoses are connected and supply stops are fully open. Clean or replace filter screen gaskets or outlet insert.

Water flow does not stop:

If water flows continuously but stops when hand enters detection zone, reverse solenoid electrical connections.

Faucet does not properly detect user:

Remove and reapply power or run faucet to maximum run time. This will cause automatic recalibration of sensing field. Recalibration is complete when solid red light disappears.

If the steps above do not solve the problem, you may need to replace the spout assembly or control box. For additional information contact Chicago Faucets customer service at 800/832-8783.

User Adjustable Temperature Control

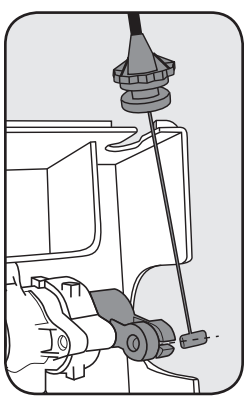

1. Thread stainless steel "T" connector into yellow mixing handle. Slide the connecting rod through the slot in the handle and pull up until it catches.

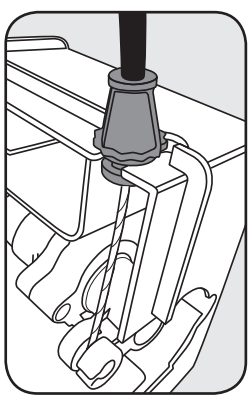

2. Slide the black riveted attachment into the groove of the control box and push back into large opening.

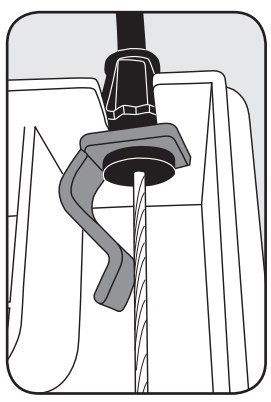

3. Slide locking clip into place.

NOTE: Be sure not to kick cable. Limit cable looping where possible.

Completing Installation: Testing and Adjustment

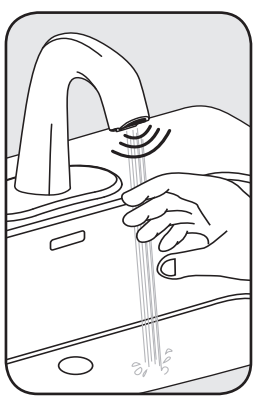

1. Once wiring is complete, the red sensor light at the faucet outlet will glow continuously for 5 seconds. After the light switches off, place your hands in front of the faucet. The faucet should activate and water should flow from the spout.

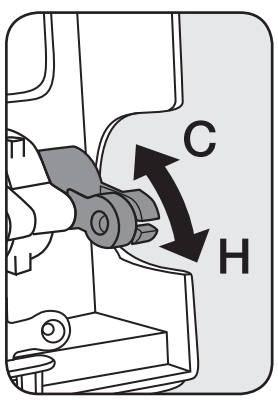

2. Adjusting the Water Temperature

a. The yellow mixer handle inside the control box is used to adjust water temperature in dual-supply installations. Turn the handle clockwise to decrease water temperature or counter-clockwise to increase water temperature.

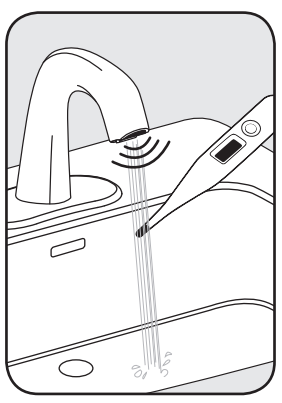

b. The mixed water temperature must be checked at the point of use and the CFC mixing valve adjusted to ensure delivery of water at a safe temperature no exceeding 110°F (43°C). Water temperatures in excess 110°F (43°C) are dangerous and may cause scalding, severe injury or death!

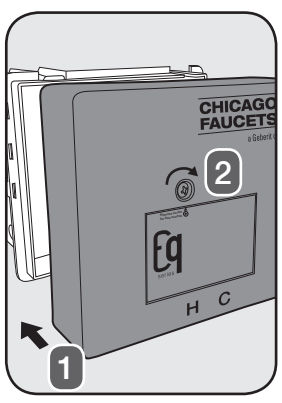

3. Reinstall the control box cover and secure it with the #2 Phillips screw.

WARNING!
Delivery of water to fixtures intended for hand washing is recommended to be controlled by valves listed to ASSE 1070. This fitting is NOT factory preset and can be adjusted to deliver water at temperatures exceeding 110°F (43°C). Further, mechanical mixing valves DO NOT provide automatic control of water temperature. Due to effects of various water conditions, periodic verification of outlet water temperature is required.

Care and Maintenance

Periodic inspection and yearly maintenance by a licensed contractor is required for all thermostatic mixing elements. Corrosive water conditions and/or unauthorized adjustments or repair could render the thermostatic valve ineffective for service intended. Regular checking and cleaning of the valve's internal components and check stops helps assure maximum life and proper product function. Frequency of cleaning and inspection depends on local water conditions. All Chicago Faucets fittings are designed and engineered to meet or exceed industry performance standards. Care should be taken when cleaning this product. Do not use abrasive cleaners, chemicals, or solvents as they can result in surface damage. Use mild soap with warm water for cleaning and protecting the surface of Chicago Faucets fittings.

For additional technical assistance, call 800/TEC-TRUE (800-832-8783) or visit our website at chicagofaucets.com.

LTPS End of Life Directives (Recycling) In an effort to produce environmentally conscious products, the LTPS contains materials that are required to be recycled by specialized companies. Please ensure you dispose of your LTPS according to local regulations. Follow applicable laws and regulations for transport, shipping, and disposal of batteries. For details on, and locations for recycling lithium based batteries, please contact a government recycling agency, your waste-disposal service, or visit reputable on-line recycling sources such as www.call2recycle.org.

CHICAGO FAUCETS LIMITED WARRANTY

TO WHOM DOES THIS WARRANTY APPLY? — The Company extends the following limited warranty to the original user only.

WHAT DOES THIS WARRANTY COVER AND HOW LONG DOES IT LAST?
This warranty covers the following Commercial Products:

LIFETIME FAUCET WARRANTY — The "Faucet," defined as any metal cast, forged, stamped or formed portion of the Product, not including electronic or moving parts or other products separately covered by this Limited Warranty or water restricting components or other components, is warranted against material manufacturing defects for the life of the Product.

FIVE YEAR FAUCET WARRANTY — Certain Products and portions of the Product are warranted against material manufacturing defects for a period of five (5) years from the date of Product purchase. Products warranted against material manufacturing defects for a period of five (5) years from the date of Product purchase are referred to by the product numbers 42X, 43X, 15XX and E-Tronic® - 4X, 5X, 6X, 7X, 8X and 9X. All zinc die cast portions of Product are warranted against material manufacturing defects for a period of five (5) years from the date of Product purchase.

THREE YEAR ELECTRONICS WARRANTY — Electronic components, including the solenoid, are warranted for three (3) years from the date of installation.

FIVE YEAR CARTRIDGE WARRANTY — The "Cartridge", defined as the metal portion of any Product typically referred to by the product numbers containing 1-099, 1-100, 377X, 217X and 274X, excluding any rubber or plastic components, is warranted against material manufacturing defects for a period of five (5) years from the date of Product purchase. All Cartridges included in the Company's Single Control or Shower Products also are warranted against material manufacturing defects for a period of five (5) years from the date of Product purchase.

ONE YEAR FINISH WARRANTY – COMMERCIAL — For Products used in commercial applications, the finish of the Product is warranted against material manufacturing defects for a period of one (1) year from the date of Product purchase.

OTHER WARRANTIES — All other Products not covered above are warranted against material manufacturing defects for a period of one (1) year from the date of Product purchase.

Other restrictions and limitations apply. For complete warranty details, call Chicago Faucets Customer Service at 847-803-5000 or visit chicagofaucets.com.

The Chicago Faucet Company
2100 South Clearwater Drive
Des Plaines, IL 60018
Phone: 847/803-5000
Fax: 847/803-5454
Technical: 800/832-8783
www.chicagofaucets.com

© 2019 Chicago Faucet Company 957.109.00.0 12/19