ROUGHING IN DIMENSIONS MAY VARY AND ARE SUBJECT TO CHANGE. NO RESPONSIBILITY IS ASSUMED FOR USE OF SUPERCEDED OR VOIDED DATA.

CHICAGO FAUCETS®
Last As Long As The Building

2100 SOUTH CLEARWATER DRIVE
DES PLAINES, ILLINOIS 60018-5999

FITTING NO.
786-GN2FC245
SUBMITTED MODEL NO.

JOB NAME | ITEM NO.

SUBMITTED AS SHOWN	
SUBMITTED AS NOTED	
SEE ATTACHED FOR SUBMITTED MODIFICATION	

ADA COMPLIANT

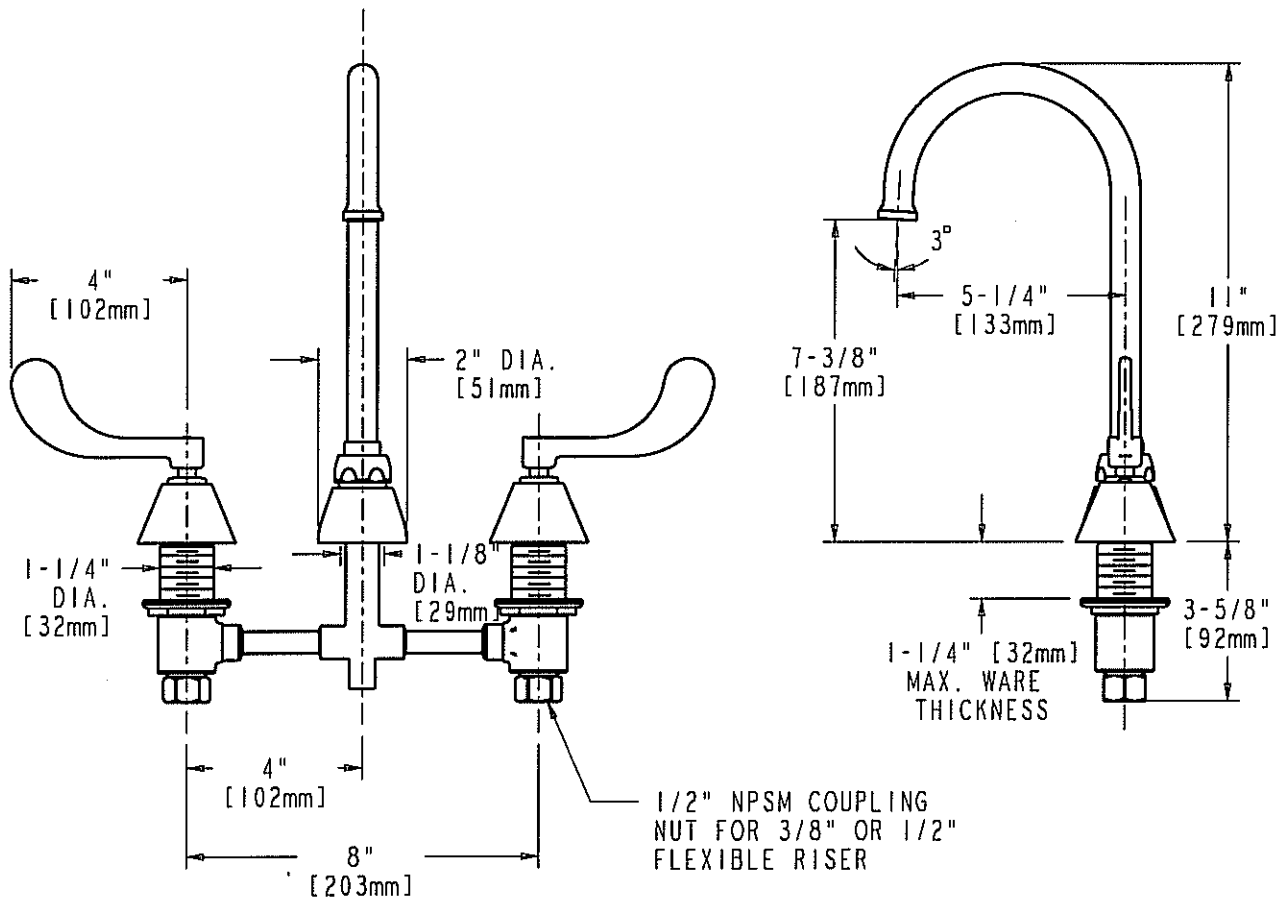

DIMENSIONS IN INCHES AND [MILLIMETERS].

TECHNICAL DATA

- DECK MOUNTED FAUCET
- GN2 RIGID/SWING GOOSENECK SPOUT
- 317 INDEXED WRISTBLADE HANDLES
- 245 CONTROL-A-FLO OPERATING CARTRIDGES
- FINISH: CHROME PLATE
- PLAIN END SPOUT RING
- 1.6 GPM [6.1 L/min.] INTERNAL FLOW CONTROL
- ASME A112.18.1M COMPLIANT
- CSA B125 APPROVED
- NSF 61 COMPLIANT

DATE: 11-27-02
BY: JAR
CHK'D: SD
APP'D:
REV: A

786-GN2FC245