CHICAGO FAUCETS®
a Geberit company

2100 South Clearwater Drive
Des Plaines, IL 60018
Phone: 847-803-5000
Fax: 847-803-5454
www.chicagofaucets.com

FOR TECHNICAL ASSISTANCE
1-800-TEC-TRUE (1-800-832-8783)

REPAIR PARTS

BY: SID | DATE: 05-05-16
CHK: SID | REV:

FITTING NO.
891-E35XKABCP
SUBMITTED MODEL NO.
ITEM NO.

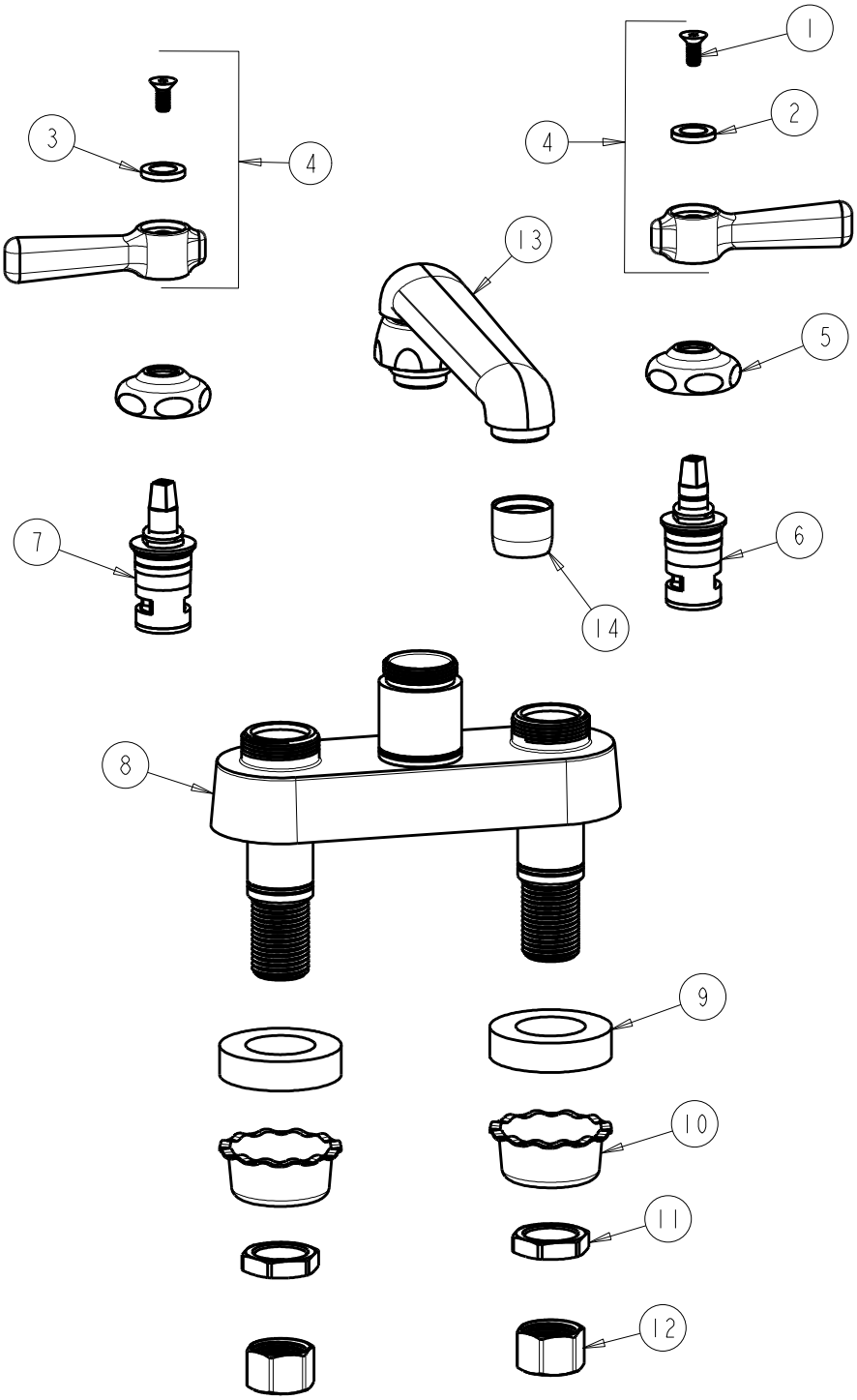

ITEM	PART NO.	DESCRIPTION	ITEM	PART NO.	DESCRIPTION
1	420-020JKNF	SCREW, 1/8 FLAT HEX HEAD X 1/2	8	------	VALVE BODY (NOT SOLD SEPARATELY)
2	633-123JKNF	INDEX BUTTON (BLUE)	9	555-313JKNF	WASHER
3	633-023JKNF	INDEX BUTTON (RED)	10	1797-114JKNF	BASIN COCK WASHER
4	369-PRJKCP	HANDLE, 2-3/8" LEVER (PAIR)	11	49-004JKRBF	LOCKNUT
5	1-214JKCP	CAP	12	49-005JKRBF	COUPLING NUT
6	1-099XKJKABNF	RH CERAMIC CARTRIDGE 1/4	13	S6LEOJKAB	SPOUT, CAST 6" C-C
7	1-100XKJKABNF	LH CERAMIC CARTRIDGE 1/4	14	E35JKABCP	OUTLET, AERATOR 1.5 GPM