ROUGHING IN DIMENSIONS MAY VARY AND ARE SUBJECT TO CHANGE. NO RESPONSIBILITY IS ASSUMED FOR USE OF SUPERCEDED OR VOIDED DATA.

CHICAGO FAUCETS®
a Geberit company

2100 South Clearwater Drive
Des Plaines, IL 60018
Phone: 847-803-5000
Fax: 847-803-5454
www.chicagofaucets.com

**FOR TECHNICAL ASSISTANCE**
1-800-TEC-TRUE (1-800-832-8783)

# ROUGH-IN

| | |
|---|---|
| BY: SID | DATE: 09-28-17 |
| CHK: JAR | REV: |

FITTING NO.
540-200963

SUBMITTED MODEL NO.

| | | | | | |
|---|---|---|---|---|---|
| SUBMITTED AS SHOWN | | SUBMITTED AS NOTED | | SEE ATTACHED FOR SUBMITTED MODIFICATION | |

JOB NAME

ITEM NO.

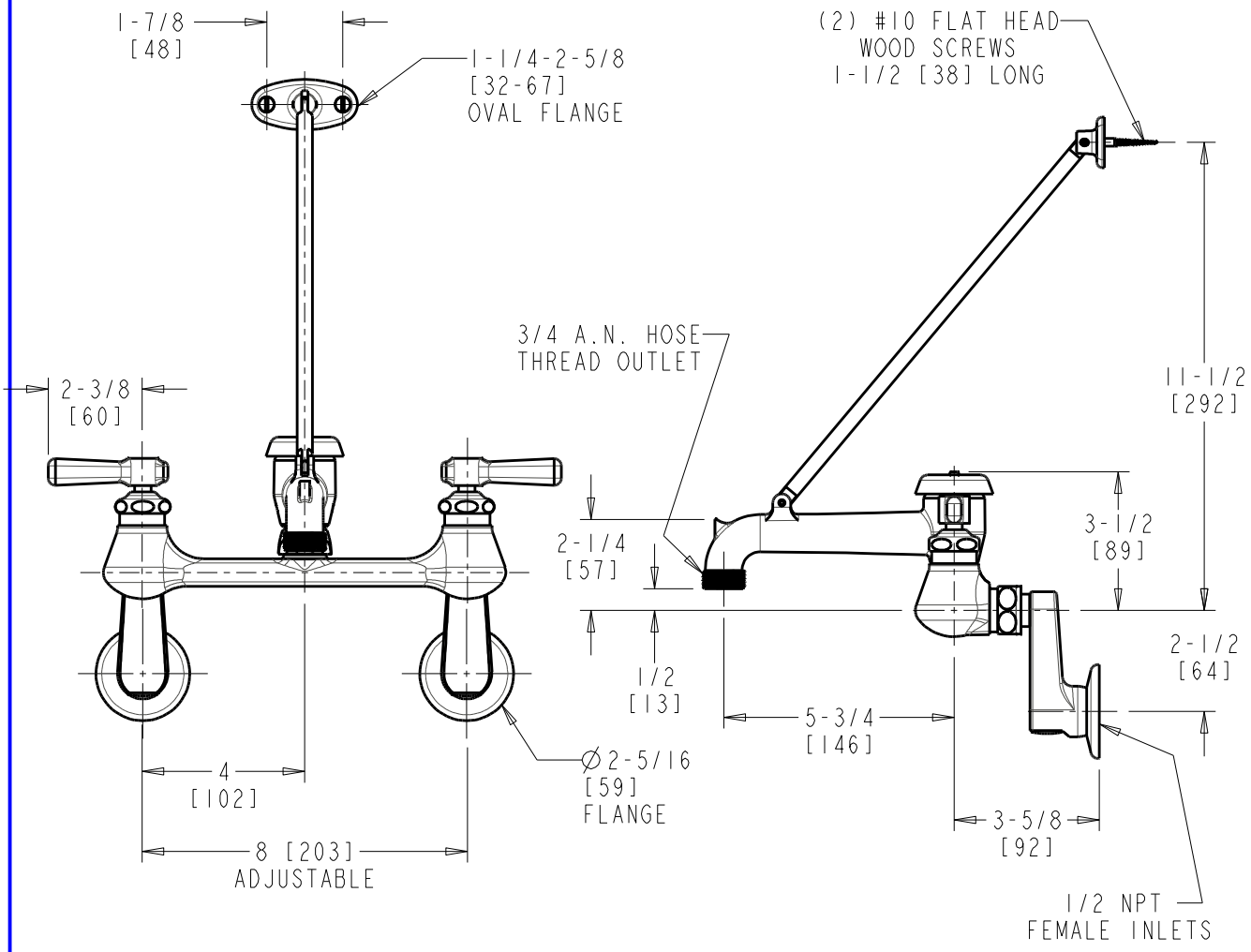


DIMENSIONS ARE IN INCHES AND [MILLIMETERS].

TECHNICAL DATA

- WALL MOUNTED FITTING
- 897-S VACUUM BREAKER SPOUT WITH PAIL HOOK AND WALL BRACE
- 369 INDEXED LEVER HANDLES
- CERAMIC DISC OPERATING CARTRIDGES
- FINISH: CHROME PLATE
- 'RC' SUPPLY ARMS WITH BUILT-IN SHUT-OFF STOP AND CHECK
- ASME A112.18.1/CSA B125.1 COMPLIANT
- ASSE 1001 COMPLIANT
- CSA B64.1.1 COMPLIANT
- ADA ANSI/ICC A117.1 COMPLIANT

ADA COMPLIANT