Repair Parts

410-T41E37VPABCP

Single Lever Hot and Cold Water Thermostatic Mixing Sink Faucet

410 Series Single-Hole, Single-Lever

Base Parts:

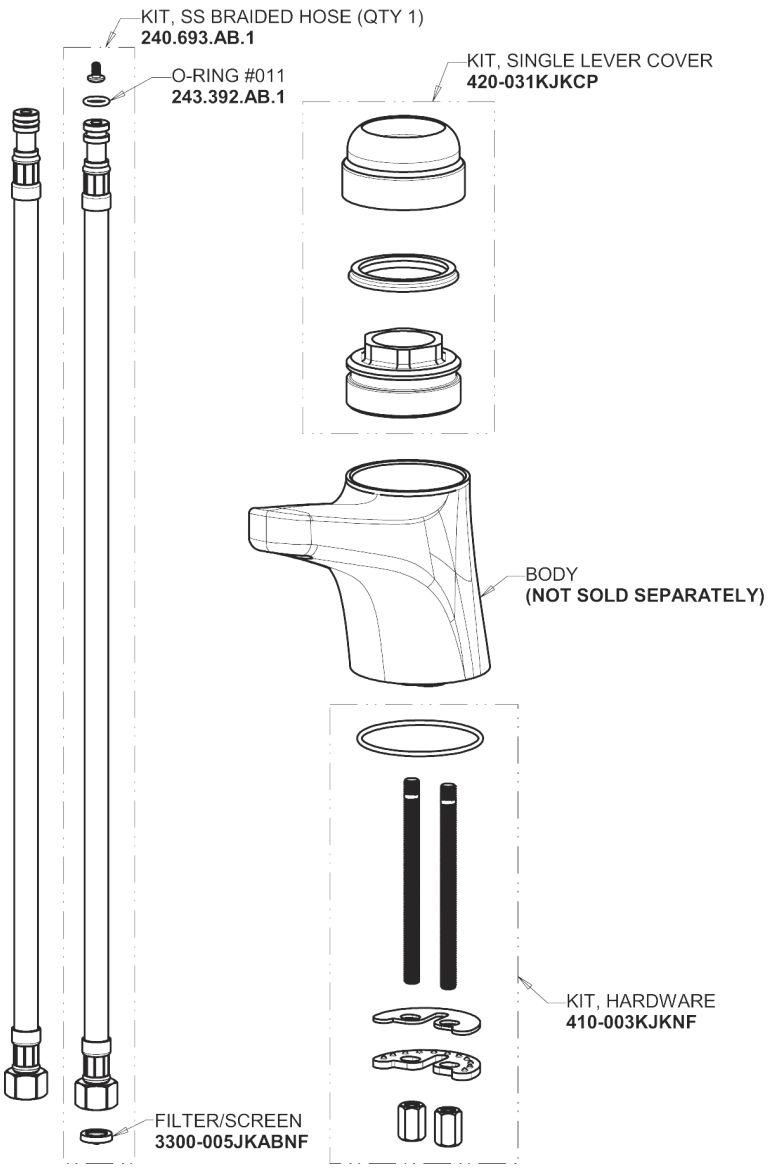

4-1/4" Lever Handle

420-030KJKCP

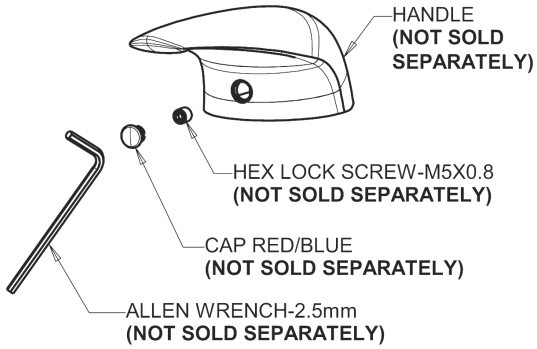

1.5 GPM (5.7 L/min) Vandal Proof Non-Aerating Laminar Outlet

E37VPJKABCP

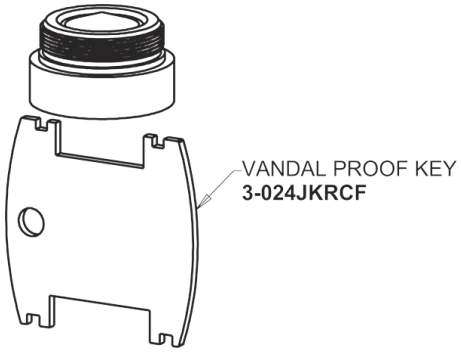

Ceramic Cartridge, Volume and Temperature Control

420-X41KJKABNF

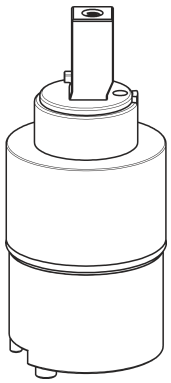

For Technical Assistance:

Phone: 800-TEC-TRUE (832-8783)

Email: techsupport.us@chicagofaucets.com

2100 South Clearwater Drive
Des Plaines, IL 60018
Phone: 847-803-5000
chicagofaucets.com