ROUGHING IN DIMENSIONS MAY VARY AND ARE SUBJECT TO CHANGE. NO RESPONSIBILITY IS ASSUMED FOR USE OF SUPERCEDED OR VOIDED DATA.

CHICAGO FAUCETS®
a Geberit company

2100 South Clearwater Drive
Des Plaines, IL 60018
Phone: 847-803-5000
Fax: 847-803-5454
www.chicagofaucets.com

**FOR TECHNICAL ASSISTANCE**
1-800-TEC-TRUE (1-800-832-8783)

# ROUGH-IN

| | | |
|---|---|---|
| | | FITTING NO. 631-218231AB |
| BY: SID | DATE: 01-22-18 | SUBMITTED MODEL NO. |
| CHK: JAP | REV: | |

| | | | | | |
|---|---|---|---|---|---|
| SUBMITTED AS SHOWN | | SUBMITTED AS NOTED | | SEE ATTACHED FOR SUBMITTED MODIFICATION | |

JOB NAME

ITEM NO.

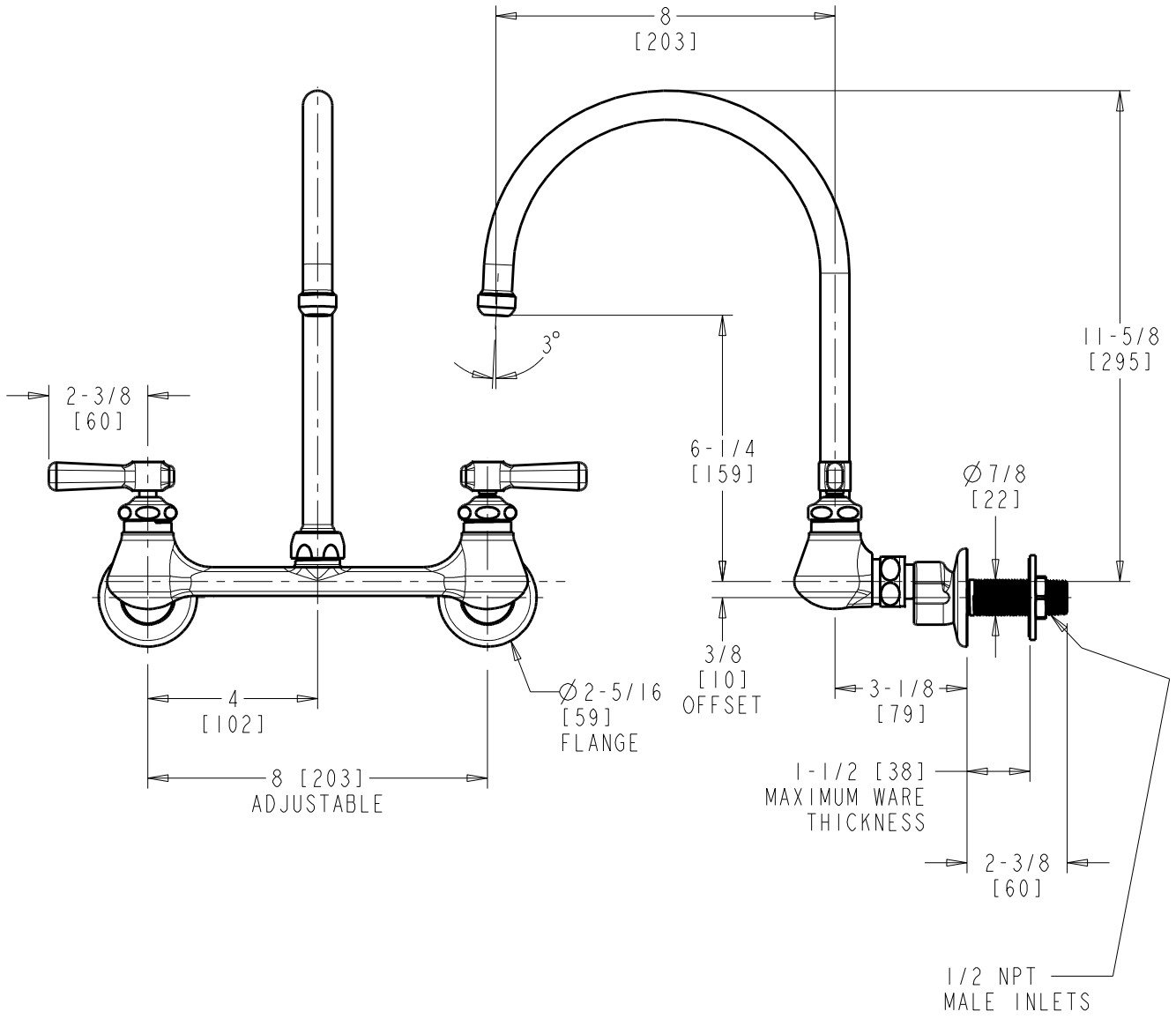


DIMENSIONS ARE IN INCHES AND [MILLIMETERS].

TECHNICAL DATA

- WALL MOUNTED SINK FITTING
- GN8A RIGID/SWING GOOSENECK SPOUT
- 369 INDEXED LEVER HANDLES
- CERAMIC DISC OPERATING CARTRIDGES
- 'GC' OFFSET ARMS WITH INTEGRAL CHECK
- 932-001K INLET SHANK ASSEMBLY
- FINISH: CHROME PLATE
- E1 QUIXTOP OUTLET
- ASME A112.18.1/CSA B125.1 COMPLIANT
- COMPLIANT TO NSF/ANSI 61, SECTION 9
- MEETS THE LEAD CONTENT REQUIREMENTS OF: CALIFORNIA, VERMONT AND NSF/ANSI 372
- ADA ANSI/CC A117.1 COMPLIANT

ADA COMPLIANT