CHICAGO FAUCETS®
a Geberit company

2100 SOUTH CLEARWATER DRIVE
DES PLAINES, ILLINOIS 60018-5999

FITTING NO.
786-GN2AFCE3
SUBMITTED MODEL NO.

JOB NAME | ITEM NO.

SUBMITTED AS SHOWN	
SUBMITTED AS NOTED	
SEE ATTACHED FOR SUBMITTED MODIFICATION	

ADA COMPLIANT

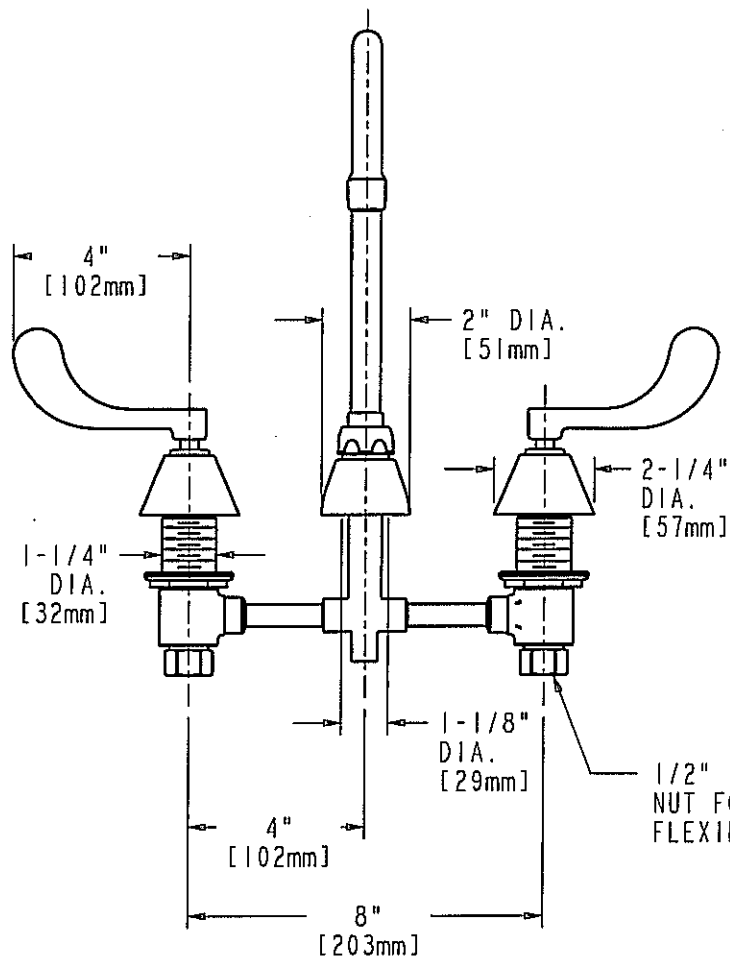

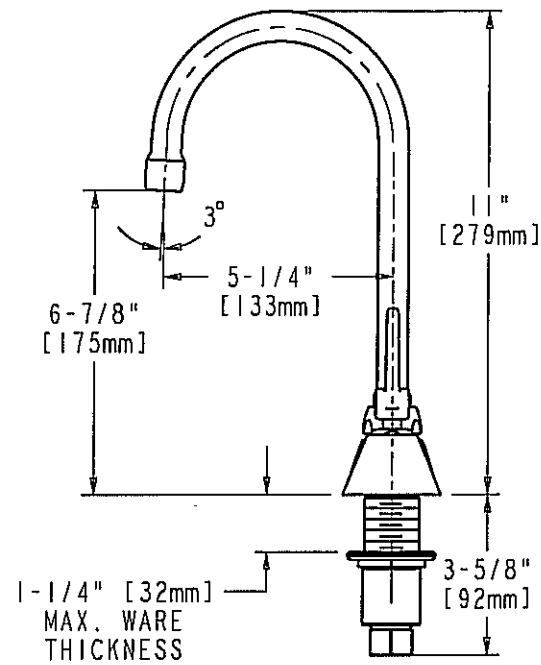

DIMENSIONS IN INCHES AND [MILLIMETERS].

TECHNICAL DATA

- DECK MOUNTED FAUCET
- GN2A RIGID/SWING GOOSENECK SPOUT
- 317 INDEXED WRISTBLADE HANDLES
- QUATURN OPERATING CARTRIDGES
- FINISH: CHROME PLATE
- E3 SOFTFLO AERATOR
- 2.2 GPM [8.3 L/min.] INTERNAL FLOW CONTROL
- ASME A112.18.1M COMPLIANT
- CSA B125 COMPLIANT
- NSF 61 COMPLIANT

DATE: 11-26-02
BY: JAR
CHK'D:
APP'D: 12/8/04
REV: A

786-GN2AFCE3

ROUGHING IN DIMENSIONS MAY VARY AND ARE SUBJECT TO CHANGE. NO RESPONSIBILITY IS ASSUMED FOR USE OF SUPERCEDED OR VOIDED DATA.