CHICAGO FAUCETS®
a Geberit company
2100 South Clearwater Drive
Des Plaines, IL 60018
Phone: 847-803-5000
Fax: 847-803-5454
www.chicagofaucets.com

FOR TECHNICAL ASSISTANCE
1-800-TEC-TRUE (1-800-832-8783)

REPAIR PARTS

BY: SID	DATE: 11-06-15
CHK:	REV:

FITTING NO.
786-HR8AE35V317AB
SUBMITTED MODEL NO.
ITEM NO.

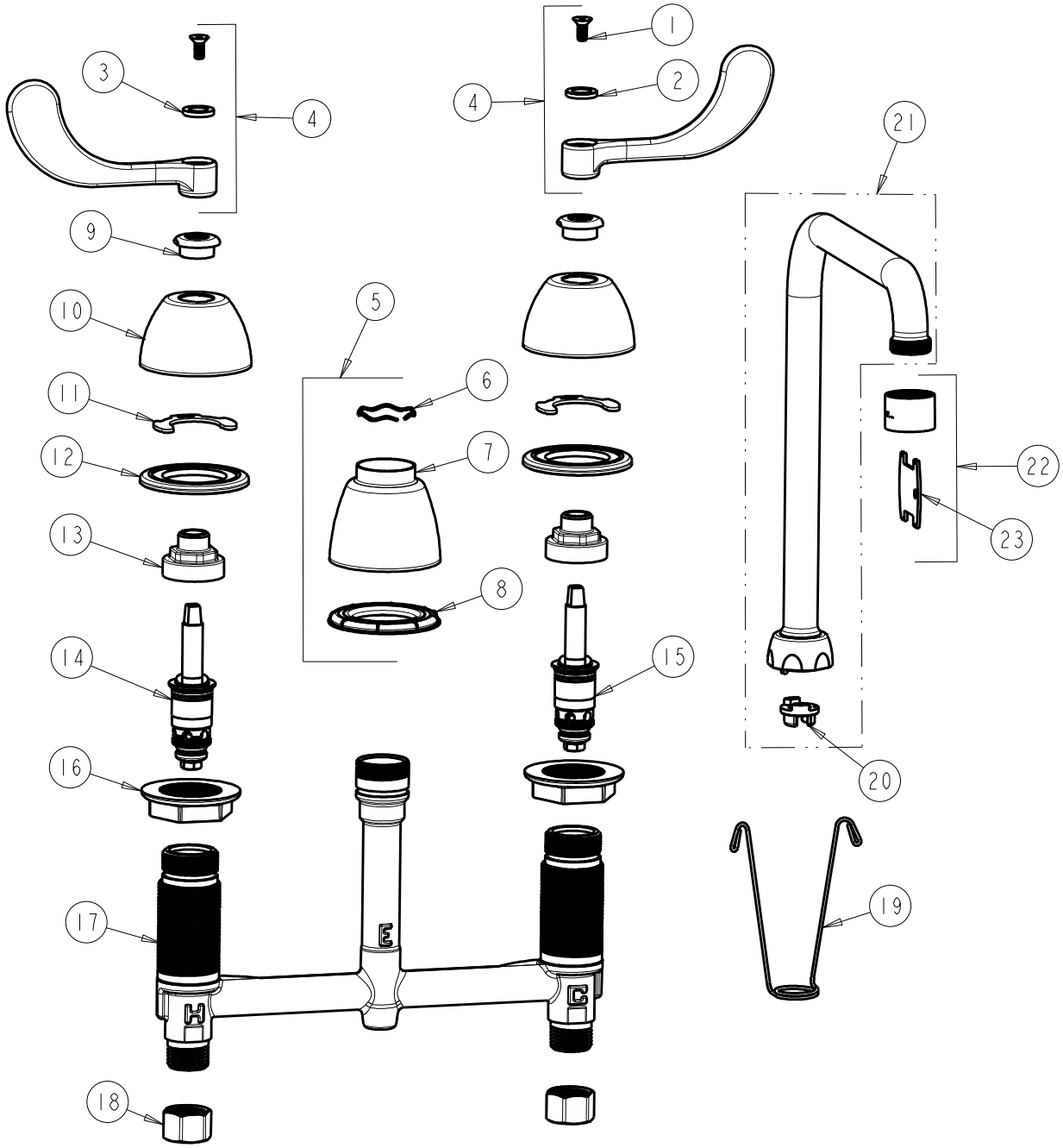

ITEM	PART NO.	DESCRIPTION	ITEM	PART NO.	DESCRIPTION
1	420-020JKNF	SCREW, 1/8 FLAT HEX HEAD X 1/2	13	274-014JKRBF	NUT, CAP
2	633-123JKNF	INDEX BUTTON (BLUE)	14	377-XTLHJKABNF	LH QUATURN CARTRIDGE
3	633-023JKNF	INDEX BUTTON (RED)	15	377-XTRHJKABNF	RH QUATURN CARTRIDGE
4	317-PRJKCP	HANDLE, 4" WRISTBLADE (PAIR)	16	250-004JKNF	LOCKNUT
5	785-400KJKCP	KIT, SPOUT ESCUTCHEON	17	------	BODY, VALVE
6	50-038JKNF	WAVE WASHER	18	49-005JKRBF	COUPLING NUT
7	785-400JKCP	ESCUTCHEON, SPOUT BASE	19	200-008JKNF	HANGER
8	888-027JKNF	SPOUT ESCUTCHEON WASHER	20	786-001JKABRBF	ADAPTER, RESTRICTED SWING
9	422-113JKCP	ESCUTCHEON NUT	21	HA8ARSJKABCP	FOR PARTS SEE HA8ARSJKCP
10	250-082JKCP	ESCUTCHEON	22	E35VPJKABCP	OUTLET VP, AERATOR 1.5 GPM
11	200-009JKNF	CLIP, RETAIN	23	3-024JKRCF	KEY, VP
12	888-026JKNF	WASHER, SEALING			