CHICAGO FAUCETS®
a Geberit company

2100 South Clearwater Drive
Des Plaines, IL 60018
Phone: 847-803-5000
Fax: 847-803-5454
www.chicagofaucets.com

FOR TECHNICAL ASSISTANCE
1-800-TEC-TRUE (1-800-832-8783)

REPAIR PARTS

BY: SID	DATE: 04-29-16
CHK:	REV:

FITTING NO.
1102-L9E35-369ABCP

SUBMITTED MODEL NO.

ITEM NO.

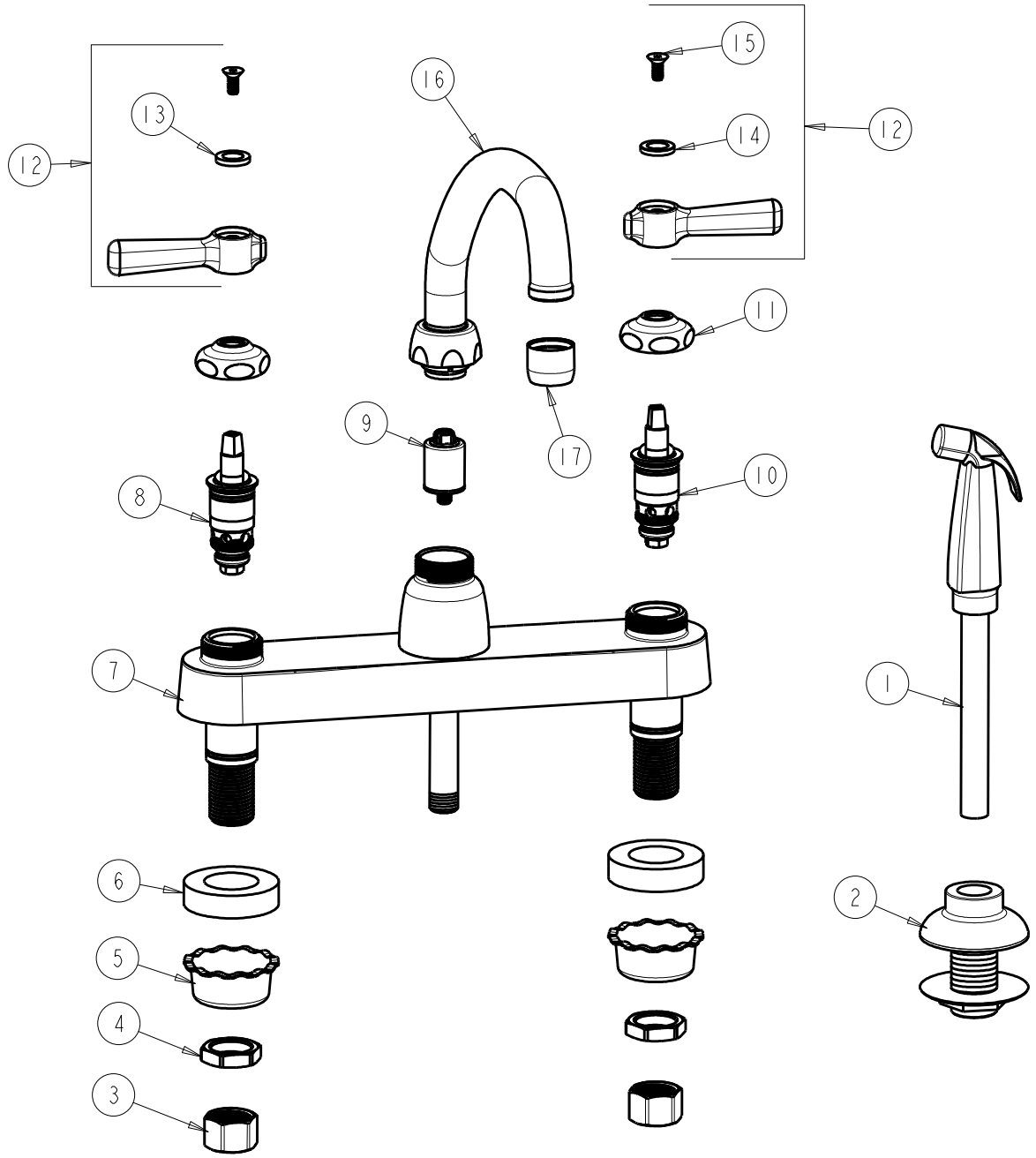

ITEM	PART NO.	DESCRIPTION	ITEM	PART NO.	DESCRIPTION
1	1103-009KJKABNF	SPRAY AND HOSE ASSEMBLY	10	1-099XTJKABNF	QUATURN CARTRIDGE (RH)
2	1103-014KJKNF	FLANGE ASSEMBLY	11	1-214JKCP	CAP
3	49-005JKRBF	COUPLING NUT	12	369-PRJKCP	HANDLE, 2-3/8 LEVER (PAIR)
4	49-004JKRBF	LOCKNUT	13	633-023JKNF	INDEX BUTTON (RED)
5	1797-114JKNF	BASIN COCK WASHER	14	633-123JKNF	INDEX BUTTON (BLUE)
6	555-313JKNF	WASHER	15	420-020JKNF	SCREW, 1/8 FLAT HEX HEAD X 1/2
7	------	VALVE BODY (NOT SOLD SEPARATELY)	16	L9LEOJKAB	SPOUT, 9-1/2 C-C
8	1-100XTJKABNF	QUATURN CARTRIDGE (LH)	17	E35JKABCP	OUTLET, AERATOR 1.5 GPM
9	1103-006JKABNF	DIVERTER VALVE			