# Repair Parts

540-LD897WXF317XKC

Hot and Cold Water Sink Faucet

CHICAGO FAUCETS

a Geberit company

5-3/4" Rigid Vacuum Breaker Spout
**897-SJKCP**

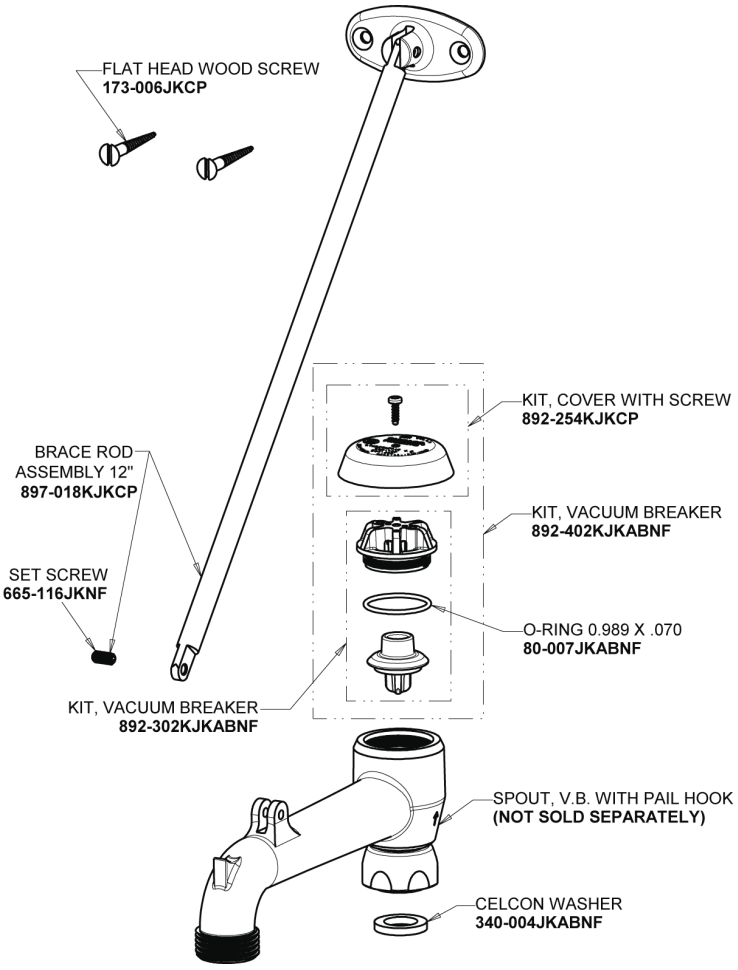


Straight 2" Inlet Supply Arm
**WXFJKABCP**

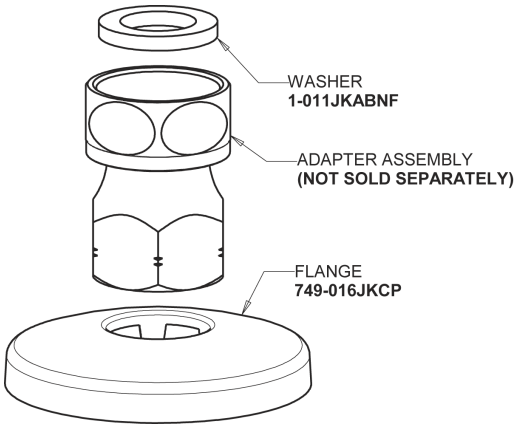


## Base Parts:

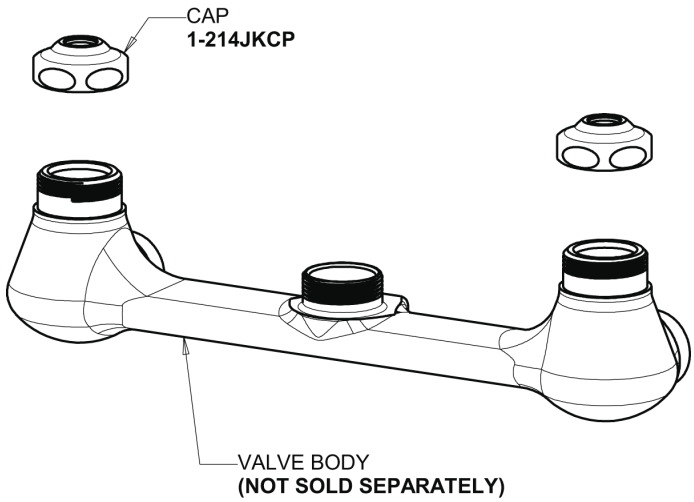


4" Wristblade Handle
**317-PRJKCP**

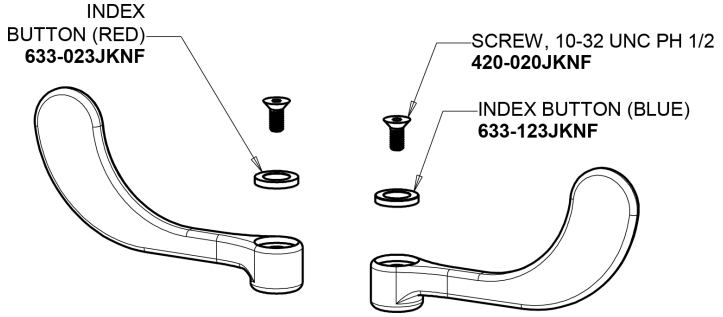


Ceramic 1/4-Turn Cartridge with Check Valve (pair)
**1-099XKCJKABNF (right)**
**1-100XKCJKABNF (left)**

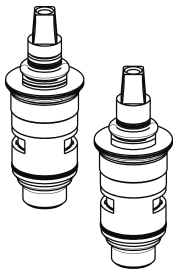

## For Technical Assistance:

Phone: 800-TEC-TRUE (832-8783)

Email: techsupport.us@chicagofaucets.com

2100 South Clearwater Drive
Des Plaines, IL 60018
Phone: 847-803-5000
chicagofaucets.com