CHICAGO FAUCETS®
Last As Long As The Building

2100 SOUTH CLEARWATER DRIVE
DES PLAINES, ILLINOIS 60018-5999

FITTING NO.
891-DJ18
SUBMITTED MODEL NO.

JOB NAME	ITEM NO.

SUBMITTED AS SHOWN	
SUBMITTED AS NOTED	
SEE ATTACHED FOR SUBMITTED MODIFICATION	

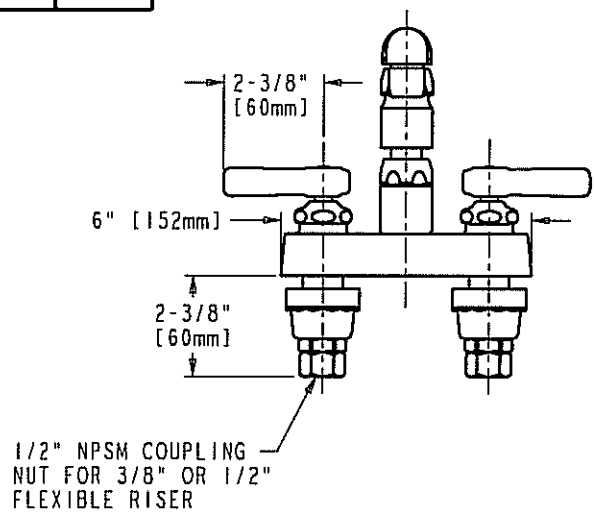

FRONT VIEW

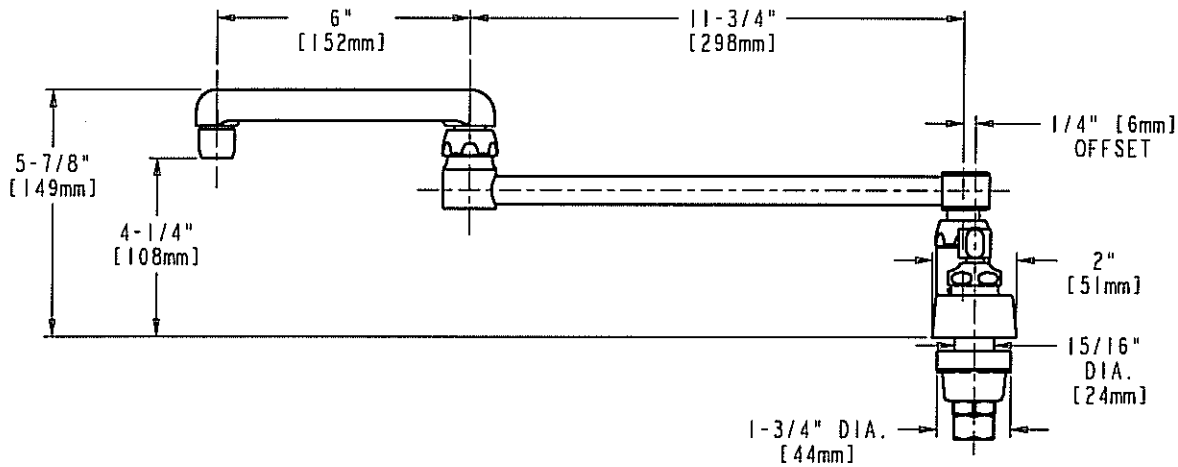

SIDE VIEW

DIMENSIONS IN INCHES AND [MILLIMETERS]

TECHNICAL DATA

- DECK MOUNTED LAVATORY FAUCET
- DJ18 DOUBLE JOINTED SWING SPOUT
- 369 INDEXED LEVER HANDLES
- QUATURN OPERATING CARTRIDGES
- FINISH: CHROME PLATE
- E3 SOFTLO AERATOR
- 2.2 GPM [8.3 L/MIN.] MAXIMUM FLOW RATE
- ASME A112.18.1M COMPLIANT
- CSA B125 COMPLIANT

DATE: 12-6-02
BY: JAR
CHK'D: SLD
APP'D:
REV: A

891-DJ18

ROUGHING IN DIMENSIONS MAY VARY AND ARE SUBJECT TO CHANGE. NO RESPONSIBILITY IS ASSUMED FOR USE OF SUPERCEDED OR VOIDED DATA.