ROUGHING IN DIMENSIONS MAY VARY AND ARE SUBJECT TO CHANGE. NO RESPONSIBILITY IS ASSUMED FOR USE OF SUPERCEDED OR VOIDED DATA.

CHICAGO FAUCETS®
a Geberit company

2100 South Clearwater Drive
Des Plaines, IL 60018
Phone: 847-803-5000
Fax: 847-803-5454
www.chicagofaucets.com

FOR TECHNICAL ASSISTANCE
1-800-TEC-TRUE (1-800-832-8783)

ROUGH-IN

FITTING NO.	
895-203720AB	
BY: SID	DATE: 12-12-13
CHK:	REV:
SUBMITTED MODEL NO.	

SUBMITTED AS SHOWN		SUBMITTED AS NOTED		SEE ATTACHED FOR SUBMITTED MODIFICATION	

JOB NAME

ITEM NO.

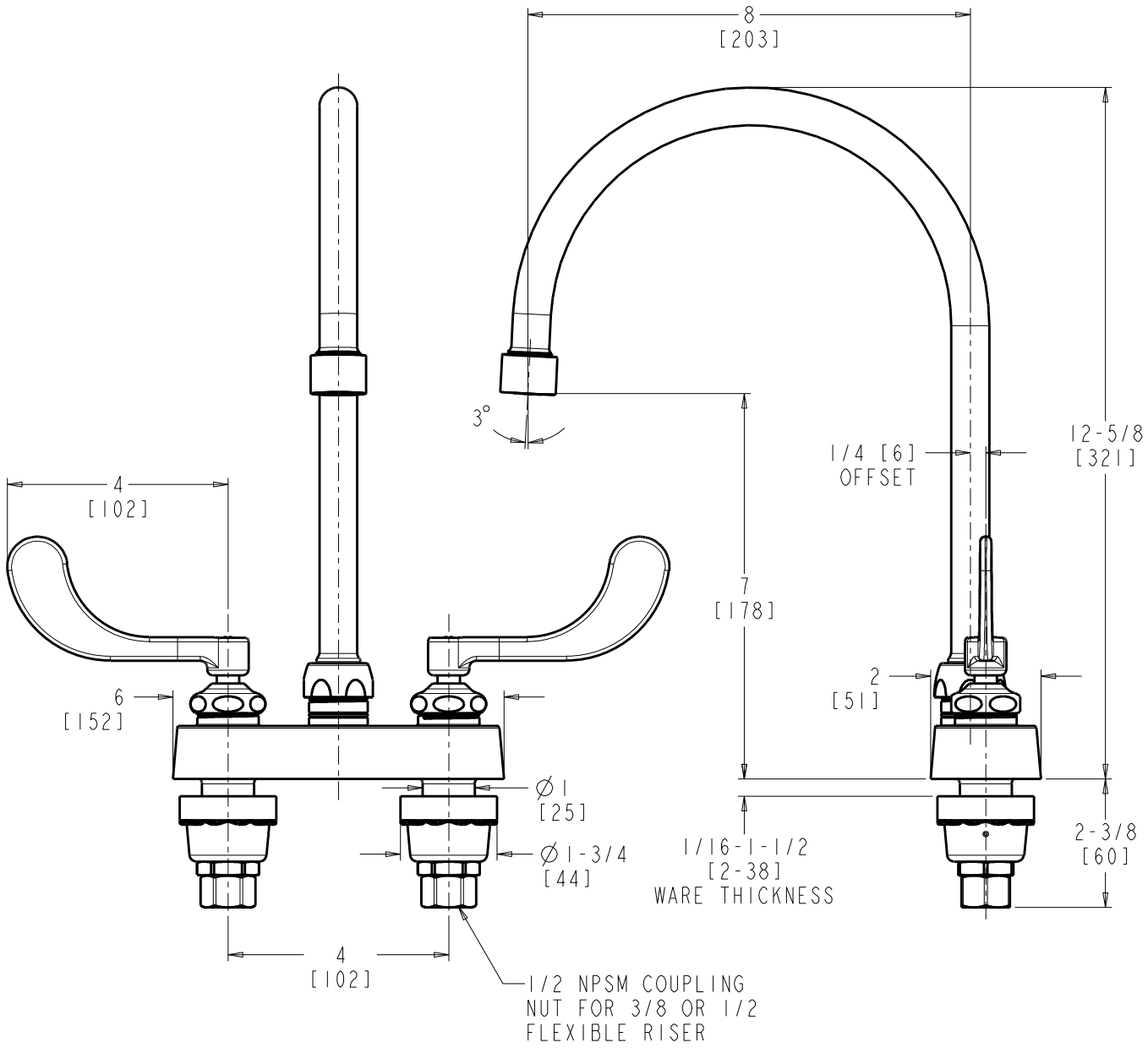

DIMENSIONS ARE IN INCHES AND [MILLIMETERS].

TECHNICAL DATA

- DECK MOUNTED LAVATORY FAUCET
- GN8A RIGID/SWING GOOSENECK SPOUT
- 317 INDEXED WRISTBLADE HANDLES
- QUATURN OPERATING CARTRIDGES
- E2805-5 VANDAL RESISTANT SPRAY OUTLET
- 0.5 GPM [1.9 L/min.] MAXIMUM FLOW RATE
- FINISH: CHROME PLATE
- ASME A112.18.1/CSA B125.1 COMPLIANT
- COMPLIANT TO NSF/ANSI 61, SECTION 9
- MEETS THE LEAD CONTENT REQUIREMENTS OF: CALIFORNIA, VERMONT AND NSF/ANSI 372
- ADA ANSI/CC A117.1 COMPLIANT
- CALGREEN

ADA COMPLIANT