Repair Parts

410-T41E2805ABCP

Single Lever Hot and Cold Water Thermostatic Mixing Sink Faucet

CHICAGO FAUCETS
a Geberit company

410 Series Single-Hole, Single-Lever

Base Parts:

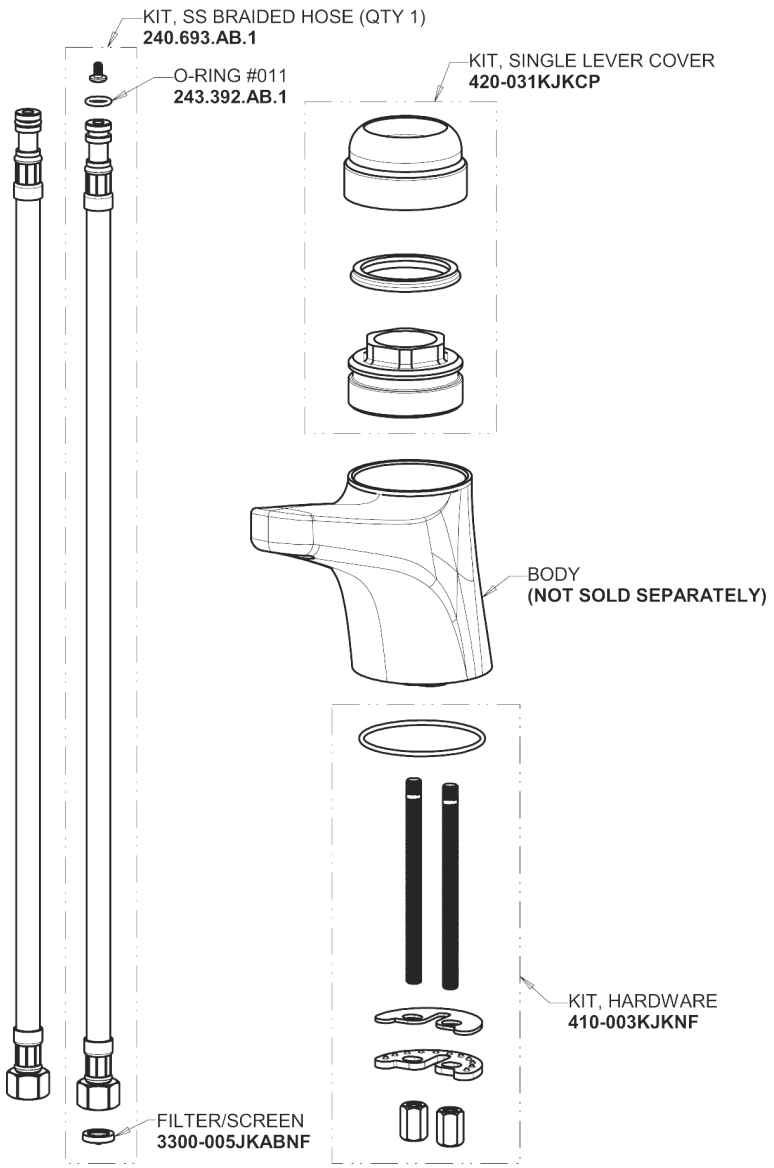

4-1/4" Lever Handle

420-030KJKCP

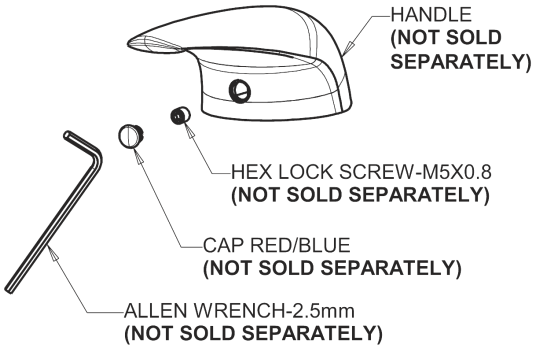

0.5 GPM (1.9 L/min) Vandal Proof Econo-Flo Non-Aerating Spray

E2805JKABCP

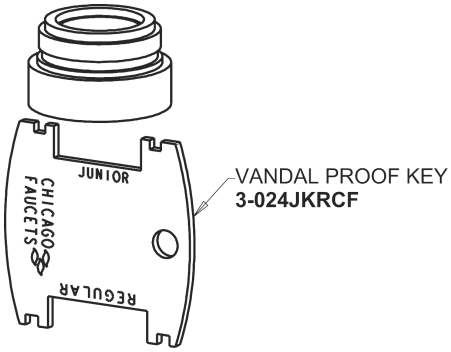

Ceramic Cartridge, Volume and Temperature Control

420-X41KJKABNF

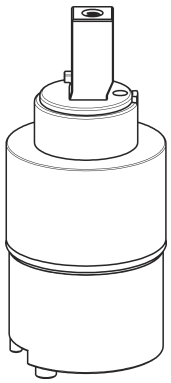

For Technical Assistance:

Phone: 800-TEC-TRUE (832-8783)

Email: techsupport.us@chicagofaucets.com

2100 South Clearwater Drive
Des Plaines, IL 60018
Phone: 847-803-5000
chicagofaucets.com