ACCESSORIES AND PARTS

90-ANGE3ABCP

Product Type

2.2 GPM @ 60 PSI Pre-Rinse Glass Filler

Features & Specifications

- Integrated Stainless Handle Clip to Hold Handle Open
- One Piece Stainless Steel Spray Nozzle and Diffuser
- E3 Softflo Aerator Outlet
- 3/4" - 14 UNS Male Thread Inlet
- All Valve Components are Serviceable
- Compatible with Fisher and T&S Hoses
- Chrome Plated Brass Handle with PVC Coating for Heat Resistance
- Nickel Plated Brass Valve Stem with Stainless Steel Spring
- Forged Brass Valve Body
- ECAST® design provides durable construction with total lead content equal to or less than 0.25% by weighted average

Warranty

- 5-Year Limited Cartridge Warranty
- 1-Year Limited Finish Warranty
- 5-Year Limited Mechanical Warranty

Codes & Standards

- ASME A112.18.1/CSA B125.1
- Certified to NSF/ANSI 61, Section 9 by CSA
- California Health and Safety Code 116875 (AB1953-2006)
- Vermont Bill S.152
- NSF/ANSI 372 Low Lead Content

Job Name _____

Item Number _____

Section/Tag _____

Model Specified _____

Architect _____

Engineer _____

Contractor _____

[ ] Submitted as Shown [ ] Submitted with Variations

Date _____



ECAST

ECAST products are intended for installation where state laws and local codes mandate lead content levels or in any location where lead content is a concern.

C US NSF/ANSI 372 LOW LEAD CONTENT

2100 South Clearwater Drive
Des Plaines, IL
P: 847/803-5000
F: 847/803-5454
Technical: 800/TEC-TRUE
www.chicagofaucets.com

90-ANGE3ABCP

Architect/Engineer Specification

Chicago Faucets No. 90-ANGE3ABCP, Pre-Rinse Glass Filler, 2.2 GPM @ 60 PSI, chrome plated. Integrated stainless steel handle clip to hold handle open. One Piece Stainless Steel Spray Nozzle and Diffuser. E3 Softflo Aerator Outlet. 3/4 - 14 UNS male thread inlet. All valve components are serviceable. Compatible with Fisher and T&S hoses. Chrome plated brass handle with PVC coating for heat resistance. Nickel plated brass valve stem with stainless steel spring. Forged brass valve body. ECAST® construction with less than 0.25% lead content by weighted average.

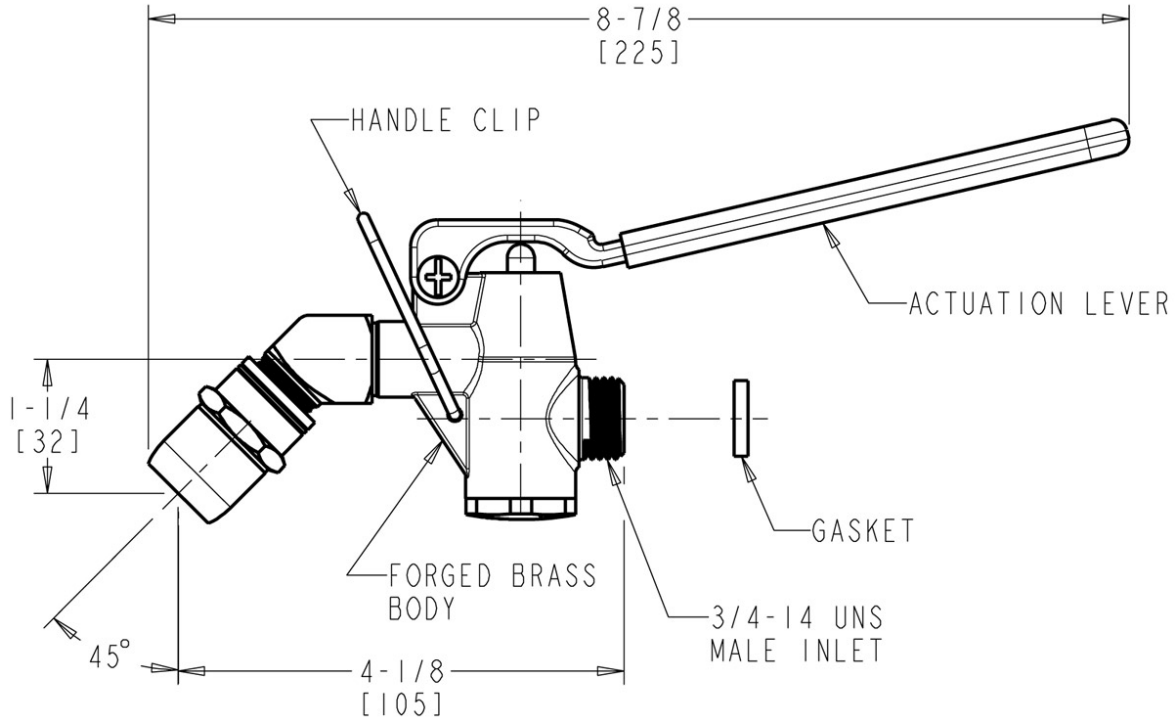

Operation and Maintenance

Installation should be in accordance with local plumbing codes. Flush all pipes thoroughly before installation. After installation, remove spout outlet or flow control and flush faucet thoroughly to clear any debris. Care should be taken when cleaning the product. Do not use abrasive cleaners, chemicals or solvents as they can result in surface damage. Use mild soap and warm water for cleaning and protecting the life of Chicago Faucet products. For specific operation and maintenance refer to the installation instructions and repair parts documents that are located at www.chicagofaucets.com.

Chicago Faucets, member of the Geberit Group, is the leading brand of commercial faucets and fittings in the United States, offering a complete range of products for schools, laboratories, hospitals, office buildings, food service, airports and sport facilities. Call 1.800.TECTRUE or 1.847.803.5000 Option 1 for installation or other technical assistance.

2100 South Clearwater Drive
Des Plaines, IL
P: 847/803-5000
F: 847/803-5454
Technical: 800/TEC-TRUE
www.chicagofaucets.com