CHICAGO FAUCETS®
a Geberit company

2100 South Clearwater Drive
Des Plaines, IL 60018
Phone: 847-803-5000
Fax: 847-803-5454
www.chicagofaucets.com

FOR TECHNICAL ASSISTANCE
1-800-TEC-TRUE (1-800-832-8783)

REPAIR PARTS

BY: JAR	DATE: 10-17-11
CHK: JAR	REV: 04-29-16

FITTING NO.
1102-E35ABCP
SUBMITTED MODEL NO.

ITEM NO.

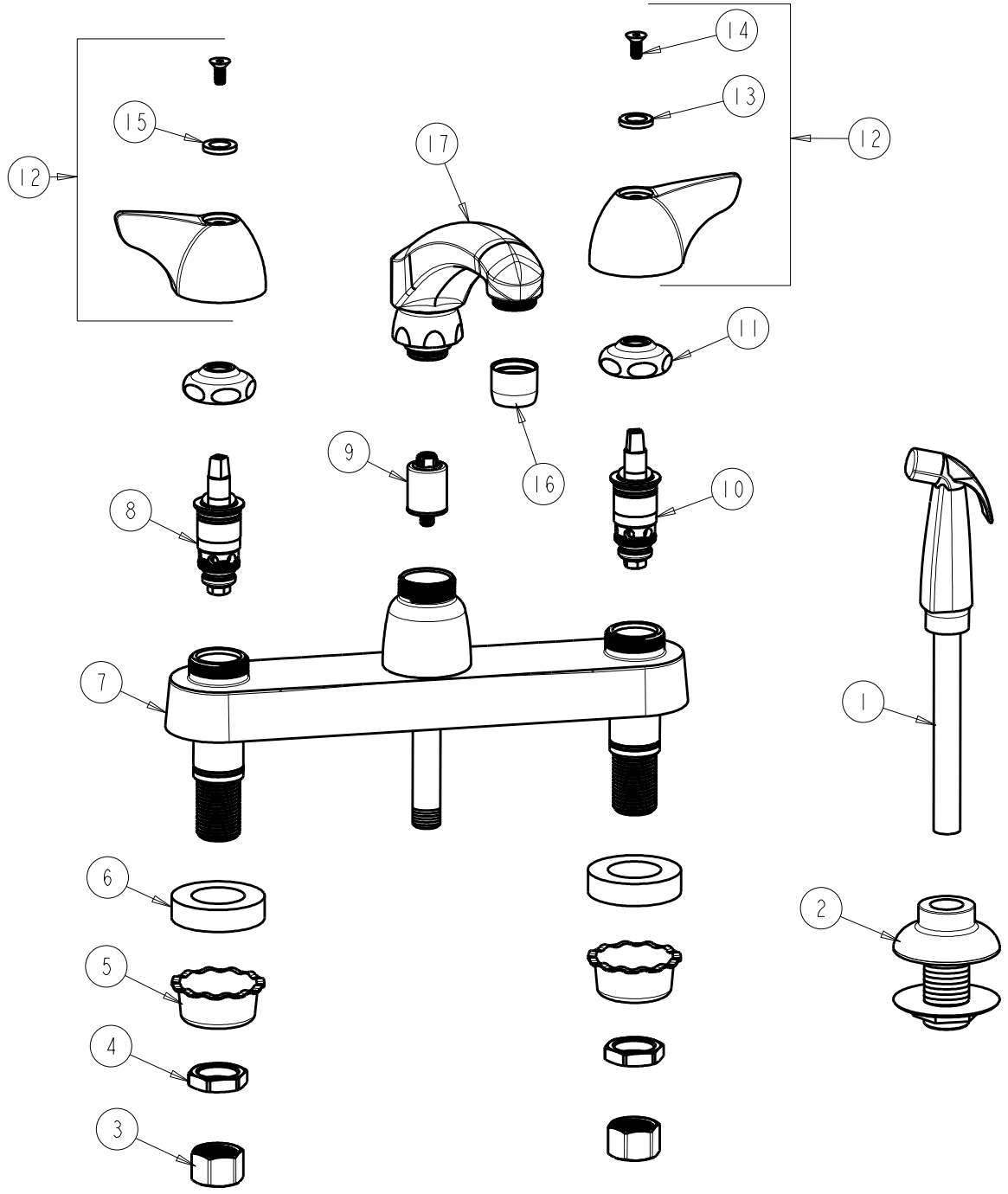

ITEM	PART NO.	DESCRIPTION	ITEM	PART NO.	DESCRIPTION
1	1103-009KJKABNF	SPRAY AND HOSE ASSEMBLY	10	1-099XTJKABNF	QUATURN CARTRIDGE (RH)
2	1103-014KJKNF	FLANGE ASSEMBLY	11	1-214JKCP	CAP
3	49-005JKRBF	COUPLING NUT	12	1000-PRJKCP	WING HANDLE ASSEMBLY (PAIR)
4	49-004JKRBF	LOCKNUT	13	633-123JKNF	INDEX BUTTON (BLUE)
5	1797-114JKNF	BASIN COCK WASHER	14	420-020JKNF	SCREW, 1/8 FLAT HEX HEAD X 1/2
6	555-313JKNF	WASHER	15	633-023JKNF	INDEX BUTTON (RED)
7	------	VALVE BODY (NOT SOLD SEPARATELY)	16	E35JKABCP	OUTLET, AERATOR 1.5 GPM
8	1-100XTJKABNF	QUATURN CARTRIDGE (LH)	17	L8LEOJKAB	SPOUT, CAST 8" C-C
9	1103-006JKABNF	DIVERTER VALVE			