Repair Parts

919-VBHS90ANGXKCAB

Deck Mounted Pre-Rinse Fitting

Base Parts:

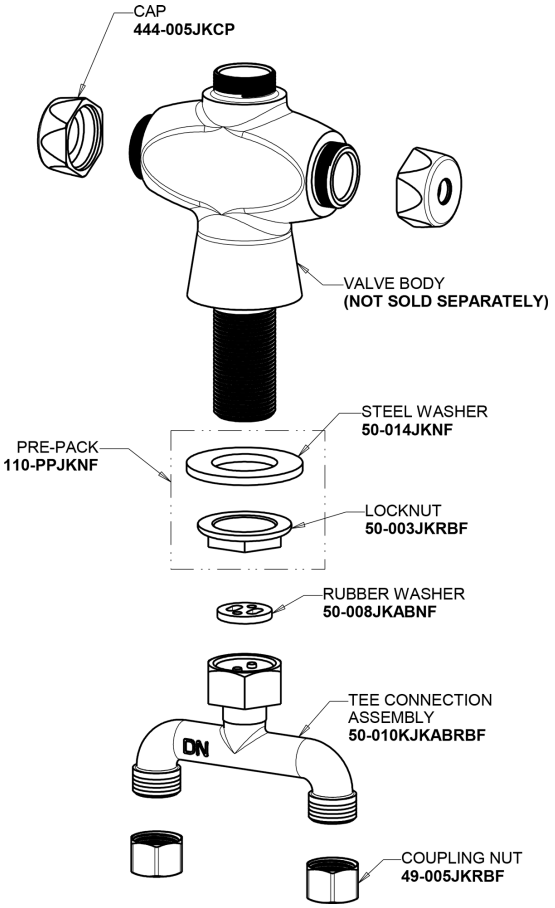

Ceramic 1/4-Turn Cartridge with Check Valve (pair)

1-099XKCJKABNF (right)

1-100XKCJKABNF (left)

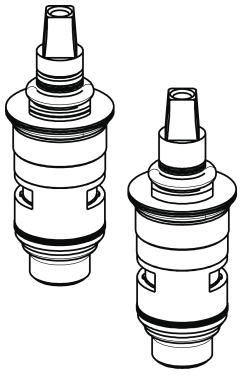

Pre-Rinse Hose and Handle

919-VB

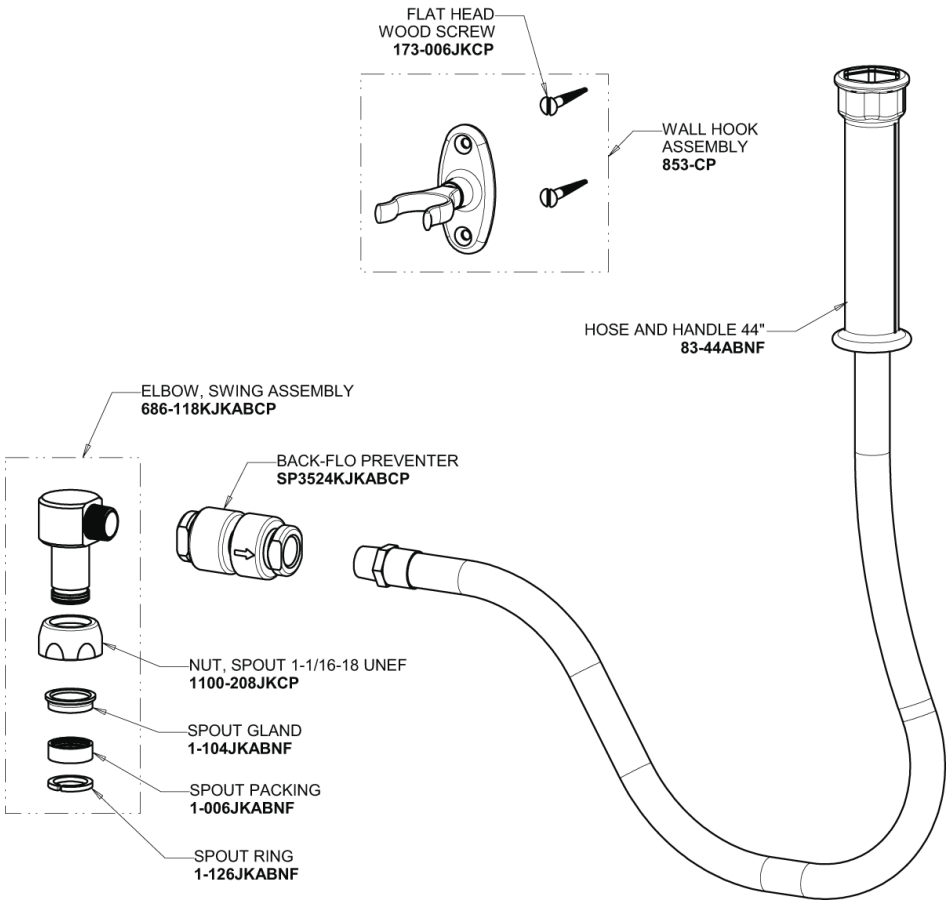

For Technical Assistance:

Phone: 800-TEC-TRUE (832-8783)

Email: techsupport.us@chicagofaucets.com

2100 South Clearwater Drive
Des Plaines, IL 60018
Phone: 847-803-5000
chicagofaucets.com

Repair Parts

919-VBHS90ANGXKCAB

Deck Mounted Pre-Rinse Fitting

CHICAGO FAUCETS
a Geberit company

Pre-Rinse Spray Valve
90-ANGABCP

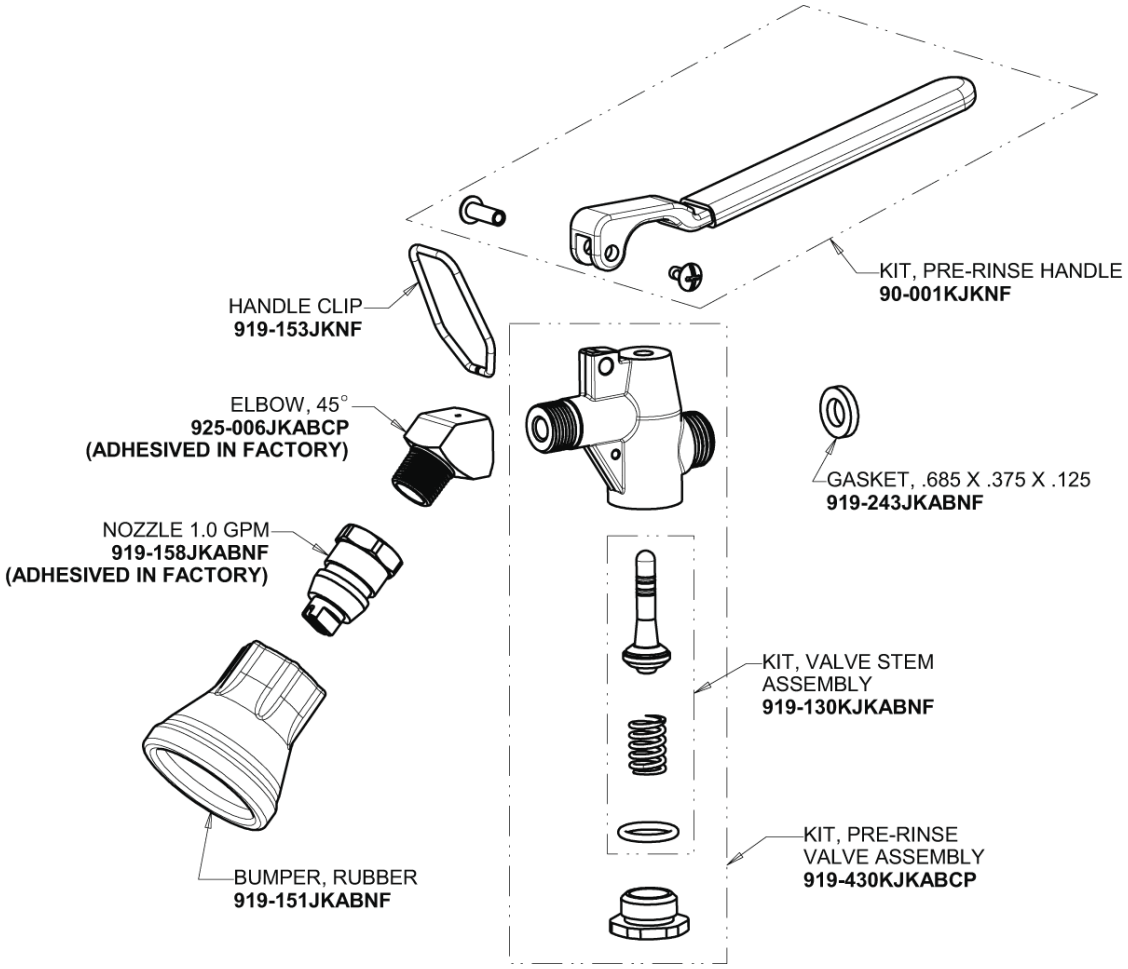

2-3/8" Lever Handle
369-PRJKCP

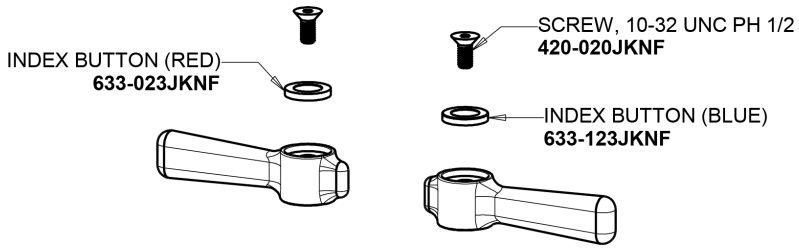

For Technical Assistance:

Phone: 800-TEC-TRUE (832-8783)
Email: techsupport.us@chicagofaucets.com

2100 South Clearwater Drive
Des Plaines, IL 60018
Phone: 847-803-5000
chicagofaucets.com