Repair Parts

410-E64VPPOABCP

Single Lever Hot and Cold Water Mixing Sink Faucet with Pop-up Waste

CHICAGO FAUCETS
a Geberit company

410 Series Single-Hole, Single-Lever

Base Parts:

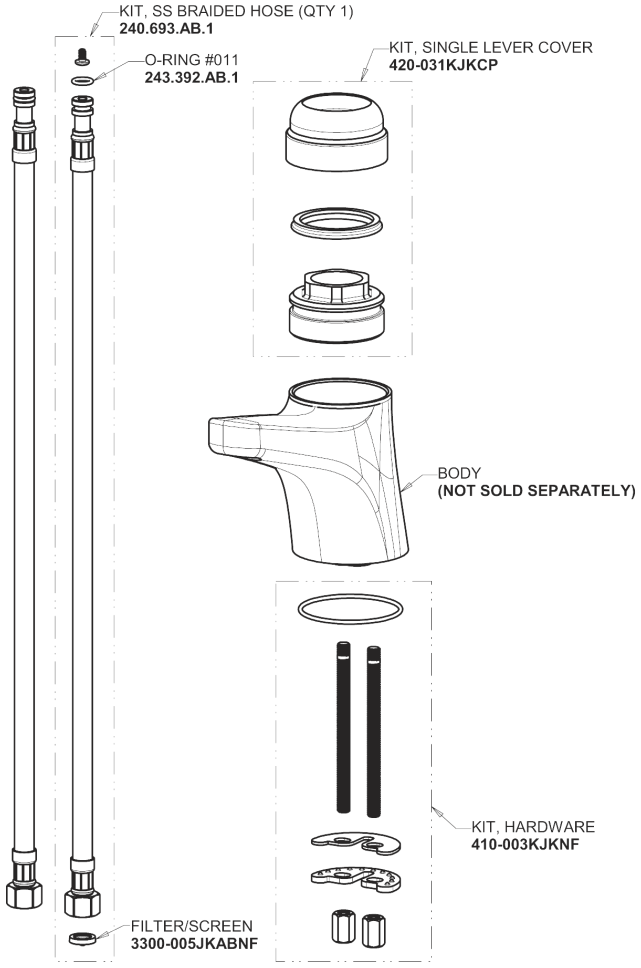

1.0 GPM (3.8 L/min) Vandal Proof Non-Aerating Laminar Outlet

E64VPJKABCP

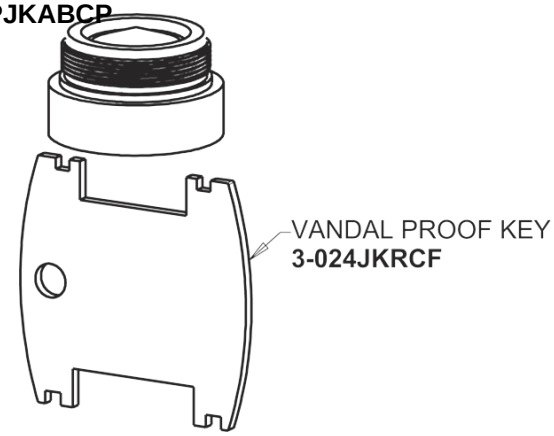

2-1/8" Diameter Pop-up Drain

1233-KJKCP

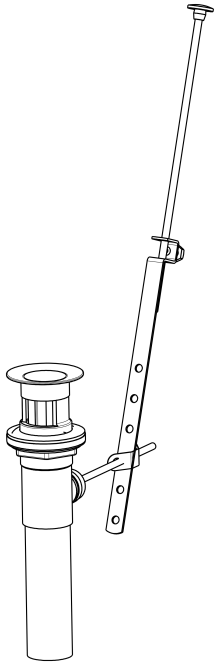

4-1/4" Lever Handle

420-030KJKCP

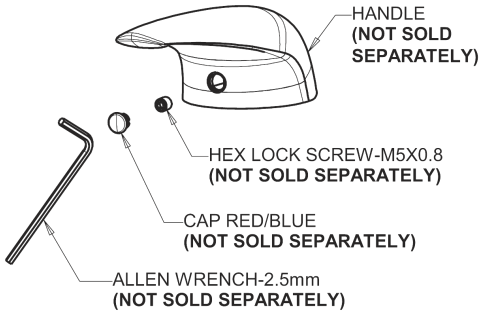

Ceramic Cartridge, Volume and Temperature Control

410-XJKABNF



For Technical Assistance:

Phone: 800-TEC-TRUE (832-8783)

Email: techsupport.us@chicagofaucets.com

2100 South Clearwater Drive
Des Plaines, IL 60018
Phone: 847-803-5000
chicagofaucets.com