# MECHANICAL FAUCETS

# 782-VBCP

## Manual Sink Faucets

### Product Type

Wall Mounted 8" Fixed Centers Concealed Hot and Cold Water Sink Faucet with Pail Hook

### Features & Specifications

- 8" Fixed Centers
- 3" Cross Handles
- Slow Compression Operating Cartridges
- 1/2" NPT Female Thread Inlets
- 3/4" Male Hose Thread Outlet
- Atmospheric Vacuum Breaker, Not Intended for Continuous Pressure Applications
- 8" Center to Center  Integral Cast Vacuum Breaker Spout with Pail Hook and Wall Brace
- Atmospheric Vacuum Breaker, Not Intended for Continuous Pressure Applications

### Performance Specification

- Rated Operating Pressure: 20-125 PSI
- Rated Operating Temperature: 40-140ºF

### Warranty

- Lifetime Limited Faucet Warranty
- 5-Year Limited Cartridge Warranty
- 1-Year Limited Finish Warranty

### Codes & Standards

- ASME A112.18.1/CSA B125.1
- Certified to NSF/ANSI 61, Section 9 by CSA
- ASSE 1001

Job Name _____

Item Number _____

Section/Tag _____

Model Specified _____

Architect _____

Engineer _____

Contractor _____

[ ] Submitted as Shown  [ ] Submitted with Variations

Date _____



2100 South Clearwater Drive
Des Plaines, IL
P: 847/803-5000
F: 847/803-5454
Technical: 800/TEC-TRUE
www.chicagofaucets.com

# 782-VBCP

# Manual Sink Faucets

## Architect/Engineer Specification

Chicago Faucets No. 782-VBCP, Sink Faucet for hot and cold water, concealed wall-mount for 8" fixed centers, chrome plated. Integral, cast brass spout with vacuum breaker, pail hook, and wall brace, 8" center-to-center. 3" metal cross handles with eight-point, tapered broach and secured blue and red index buttons. Slow compression rebuildable cartridge, opens and closes 360° for fine adjustment, closes with water pressure, features square, tapered stem. 1/2" NPT female thread inlets. 3/4" male hose thread outlet. NOTE: Atmospheric vacuum breaker is NOT intended for continuous pressure applications. This product is tested and certified to industry standards: ASME A112.18.1/CSA B125.1, Certified to NSF/ANSI 61, Section 9 by CSA, and ASSE 1001.

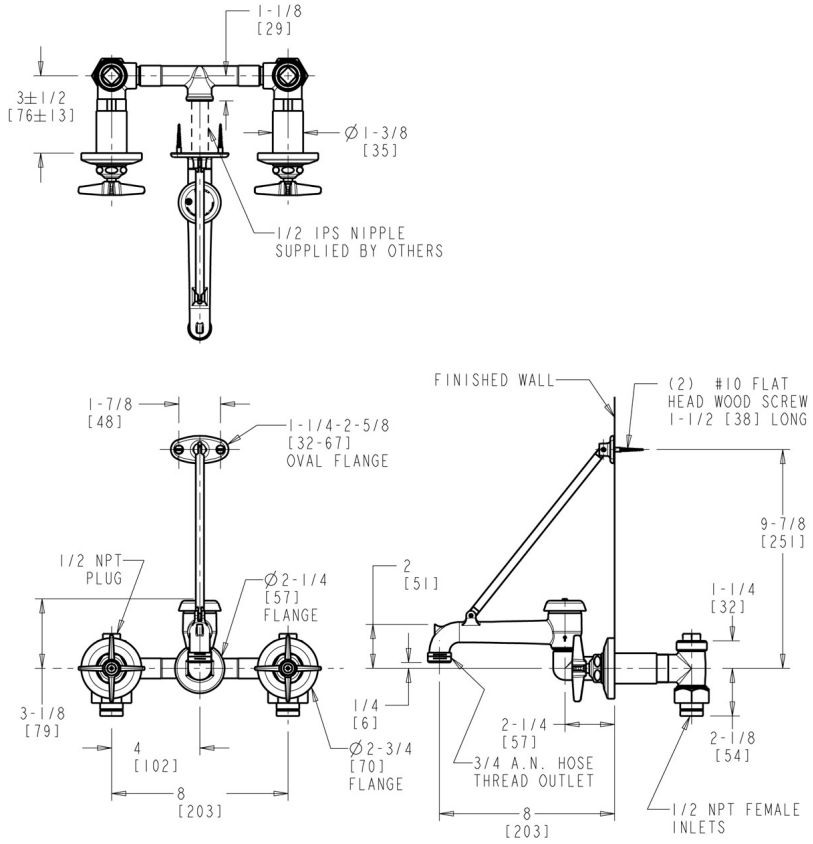


## Operation and Maintenance

Installation should be in accordance with local plumbing codes. Flush all pipes thoroughly before installation. After installation, remove spout outlet or flow control and flush faucet thoroughly to clear any debris. Care should be taken when cleaning the product. Do not use abrasive cleaners, chemicals or solvents as they can result in surface damage. Use mild soap and warm water for cleaning and protecting the life of Chicago Faucet products. For specific operation and maintenance refer to the installation instructions and repair parts documents that are located at www.chicagofaucets.com.

Chicago Faucets, member of the Geberit Group, is the leading brand of commercial faucets and fittings in the United States, offering a complete range of products for schools, laboratories, hospitals, office buildings, food service, airports and sport facilities. Call 1.800.TECTRUE or 1.847.803.5000 Option 1 for installation or other technical assistance.


2100 South Clearwater Drive
Des Plaines, IL
P: 847/803-5000
F: 847/803-5454
Technical: 800/TEC-TRUE
www.chicagofaucets.com