CHICAGO FAUCETS®
a Geberit company

2100 South Clearwater Drive
Des Plaines, IL 60018
Phone: 847-803-5000
Fax: 847-803-5454
www.chicagofaucets.com

FOR TECHNICAL ASSISTANCE
1-800-TEC-TRUE (1-800-832-8783)

REPAIR PARTS

BY: SID	DATE: 08-19-15
CHK:	REV:

FITTING NO.
920-L204AB
SUBMITTED MODEL NO.

ITEM NO.

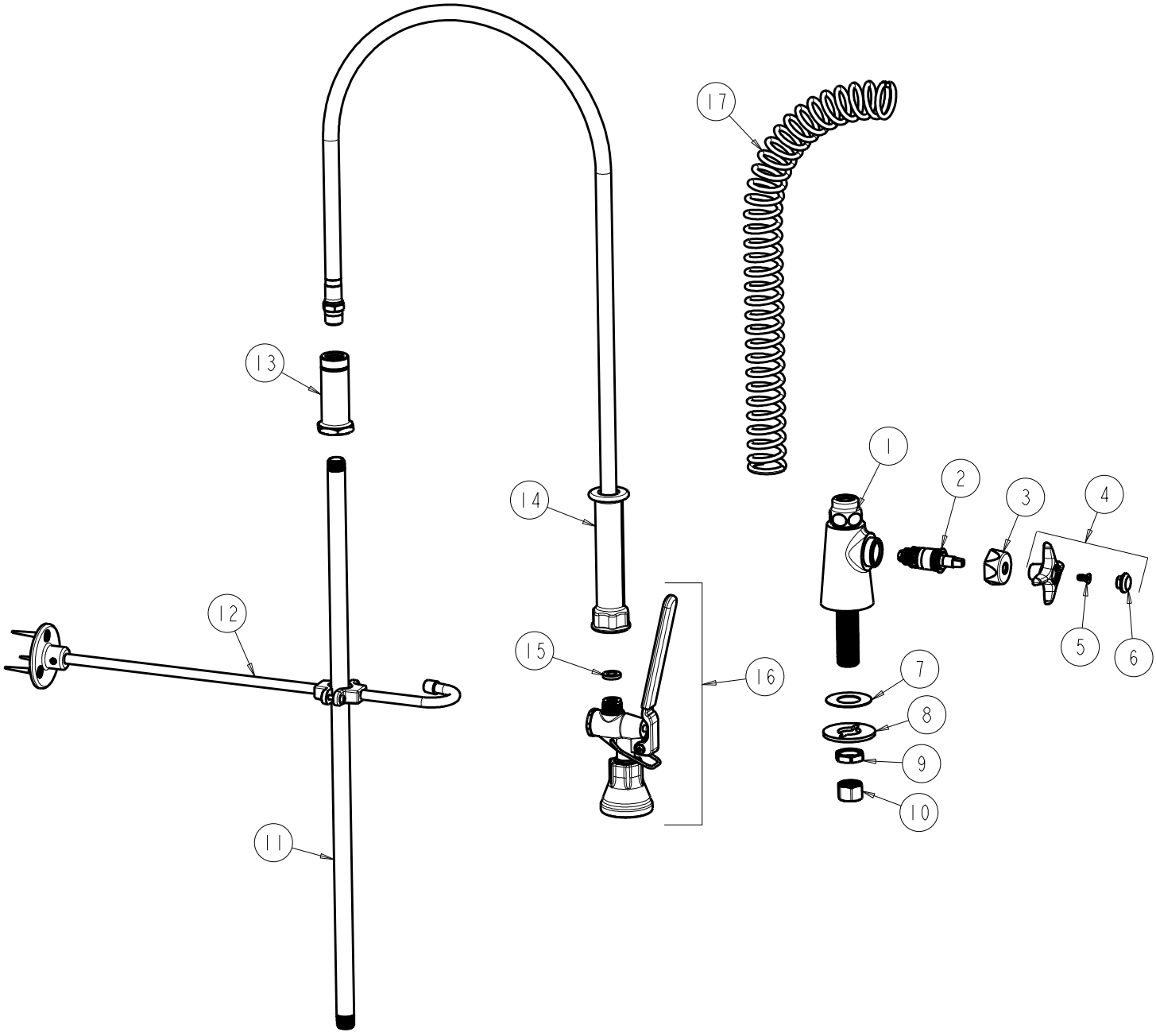

ITEM	PART NO.	DESCRIPTION	ITEM	PART NO.	DESCRIPTION
1	------	VALVE BODY (NOT SOLD SEPARATELY)	10	49-005JKRBF	COUPLING NUT
2	217-XTLHJKABNF	CARTRIDGE, SLO-COMPRESSION (LH)	11	919-039JKABCP	3/8" NPT X 23" RISER
3	444-005JKCP	CAP	12	902-MHJKCP	PIPE STRAP AND HOOK ASSEMBLY
4	204-CWJKCP	HANDLE, 4 ARM	13	919-038JKABCP	GUIDE SHANK
5	420-020JKNF	SCREW, 1/8 FLAT HEX HEAD X 1/2	14	83-44ABNF	44" HOSE AND HANDLE ASSEMBLY
6	216-178JKNF	BUTTON 'CW'	15	919-243JKABNF	GASKET, .685 X .375 X .125
7	333-103JKNF	RUBBER WASHER	16	90-LABCP	PRE-RINSE VALVE, LOW FLOW
8	807-112JKNF	WASHER	17	919-014JKCP	SPRING
9	49-004JKRBF	LOCKNUT			