Repair Parts

405-AB

Concealed Hot and Cold Water Sink Faucet

Base Parts:

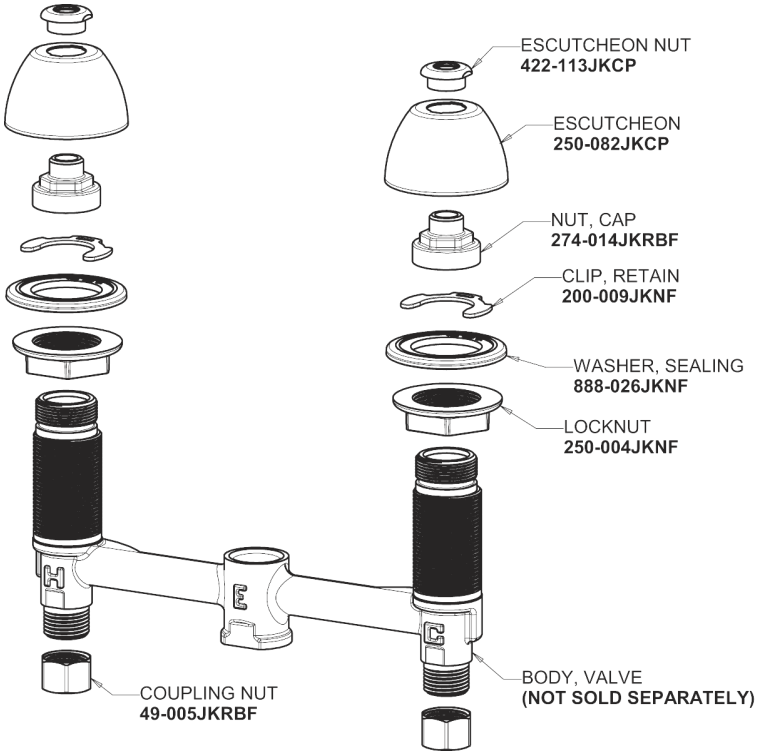

2-3/8" Lever Handle
390-PRJKCP

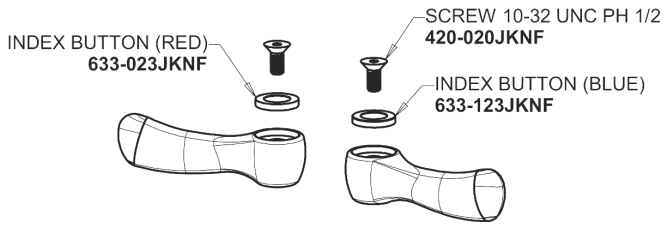

405 Series Spout
401-602KJKCP

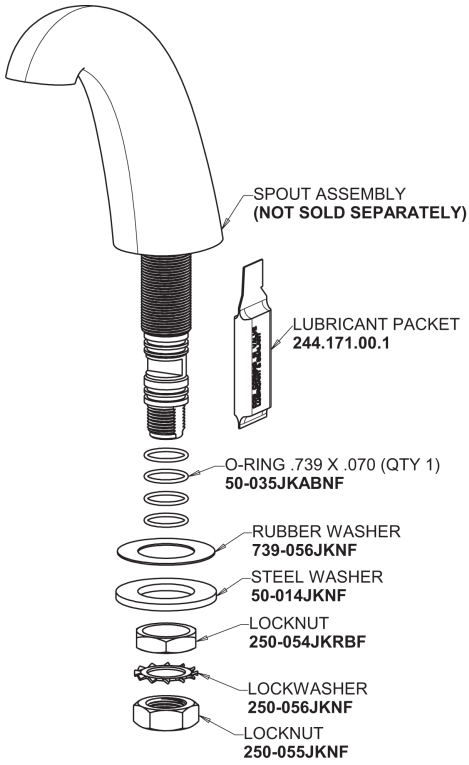

2.2 GPM (8.3 L/min) Softflo Aerator
E12JKABCP



Quaturn Compression Cartridge (pair)
377-XTRHJKABNF (right)
377-XTLHJKABNF (left)

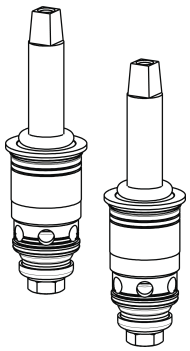

For Technical Assistance:

Phone: 800-TEC-TRUE (832-8783)

Email: techsupport.us@chicagofaucets.com

2100 South Clearwater Drive
Des Plaines, IL 60018
Phone: 847-803-5000
chicagofaucets.com