ROUGHING IN DIMENSIONS MAY VARY AND ARE SUBJECT TO CHANGE. NO RESPONSIBILITY IS ASSUMED FOR USE OF SUPERCEDED OR VOIDED DATA.

CHICAGO FAUCETS®
a Geberit company

2100 South Clearwater Drive
Des Plaines, IL 60018
Phone: 847-803-5000
Fax: 847-803-5454
www.chicagofaucets.com

FOR TECHNICAL ASSISTANCE
1-800-TEC-TRUE (1-800-832-8783)

ROUGH-IN

FITTING NO.	
2302-214079AB	
BY: SID	DATE: 11-08-16
SUBMITTED MODEL NO.	
CHK:	REV:

SUBMITTED AS SHOWN		SUBMITTED AS NOTED		SEE ATTACHED FOR SUBMITTED MODIFICATION	

JOB NAME

ITEM NO.

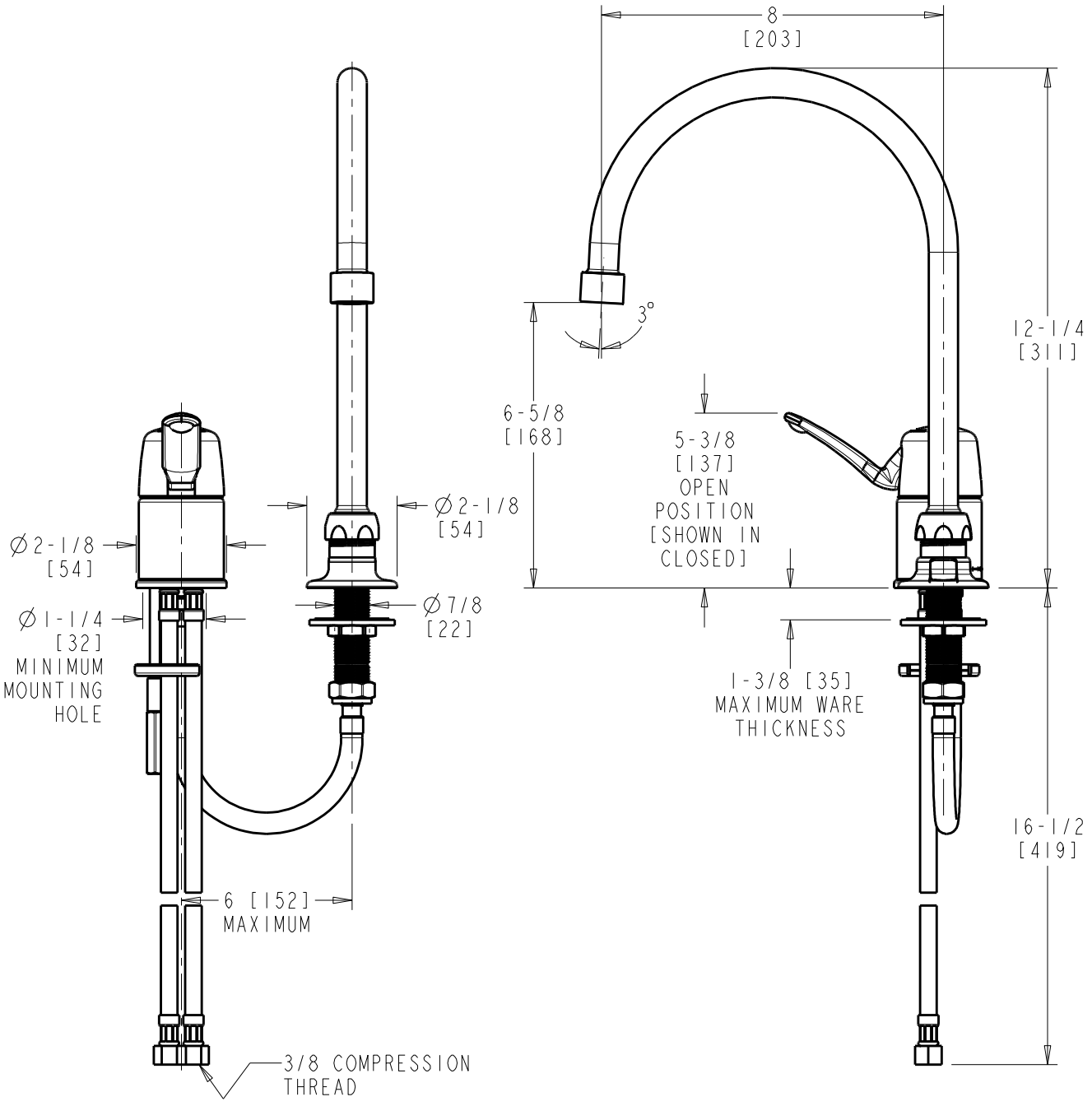

DIMENSIONS ARE IN INCHES AND [MILLIMETERS].

TECHNICAL DATA

- MARATHON DECK MOUNTED FITTING
- GN8A RIGID/SWING GOOSENECK SPOUT
- 2-3/4" METAL LEVER HANDLE
- CERAMIC MIXING CARTRIDGE
- MAX. MIXING ANGLE 120°
- TEMPERATURE LIMIT STOP
- 3/8 COMPRESSION STAINLESS STEEL HOSES
- FINISH: CHROME PLATE
- E3VP VANDAL RESISTANT SOFTFLO AERATOR
- 2.2 GPM [8.3 L/min.] MAXIMUM FLOW RATE
- ASME A112.18.1/CSA B125.1 COMPLIANT
- COMPLIANT TO NSF/ANSI 61, SECTION 9
- MEETS THE LEAD CONTENT REQUIREMENTS OF: CALIFORNIA, VERMONT AND NSF/ANSI 372
- ADA ANSI/CC A117.1 COMPLIANT

ADA COMPLIANT