Repair Parts

510-SSVBXKCAB

Pre-Rinse Fitting

Base for 510 Series Pre-rinse Fittings

Base Parts:

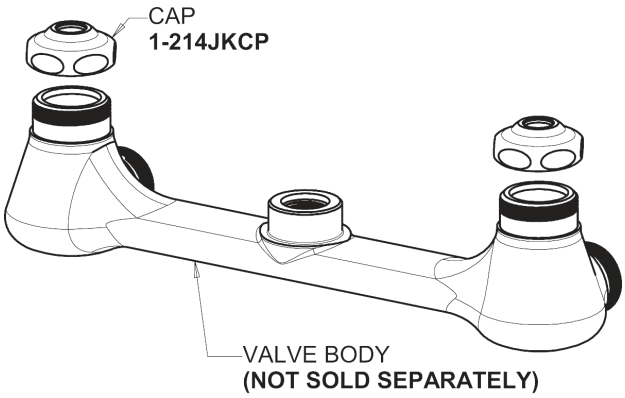

2-3/8" Lever Handle

369-PRJKCP

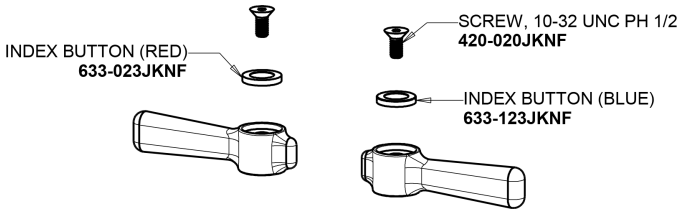

Ceramic 1/4-Turn Cartridge with Check Valve (pair)

1-099XKCJKABNF (right)

1-100XKCJKABNF (left)

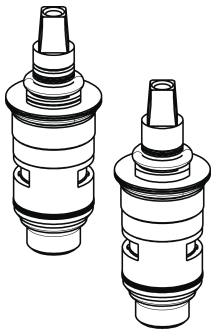

Pre-Rinse Assembly

919-SVBLEAABCP

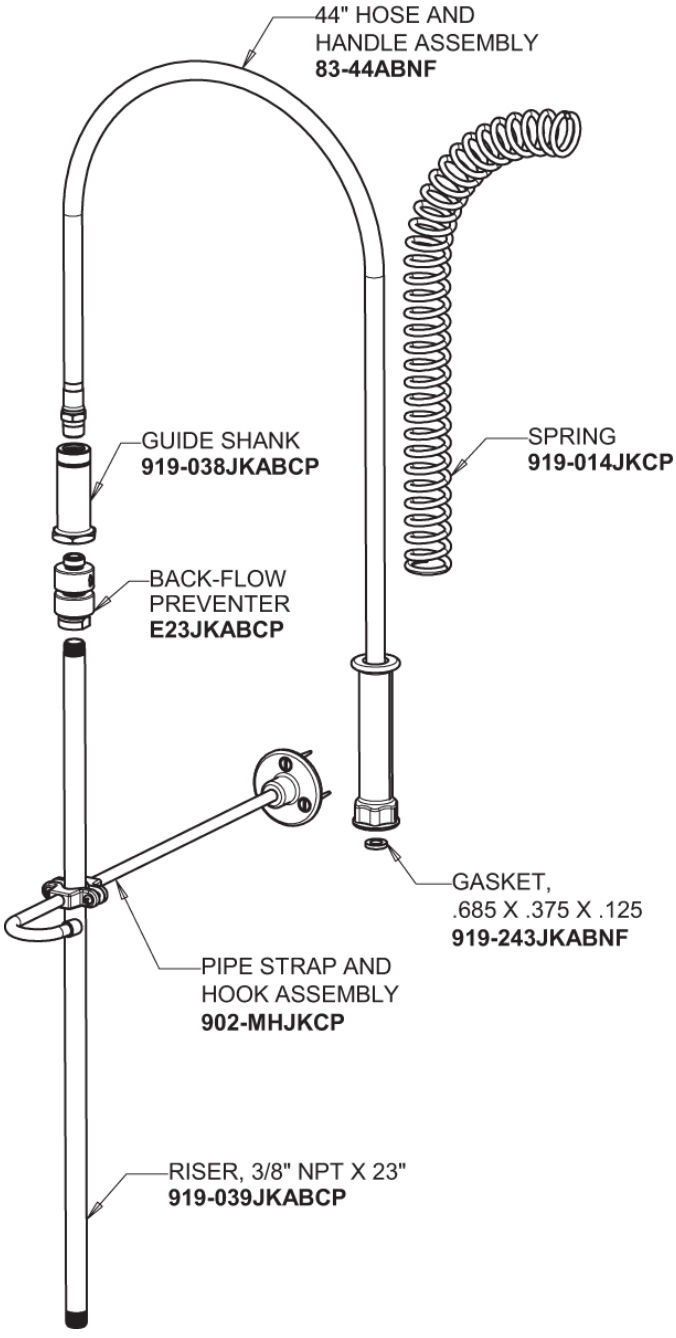

For Technical Assistance:

Phone: 800-TEC-TRUE (832-8783)

Email: techsupport.us@chicagofaucets.com

2100 South Clearwater Drive
Des Plaines, IL 60018
Phone: 847-803-5000
chicagofaucets.com

Repair Parts

510-SSVBXKCAB

Pre-Rinse Fitting

Pre-Rinse Spray Valve
90-LABCP

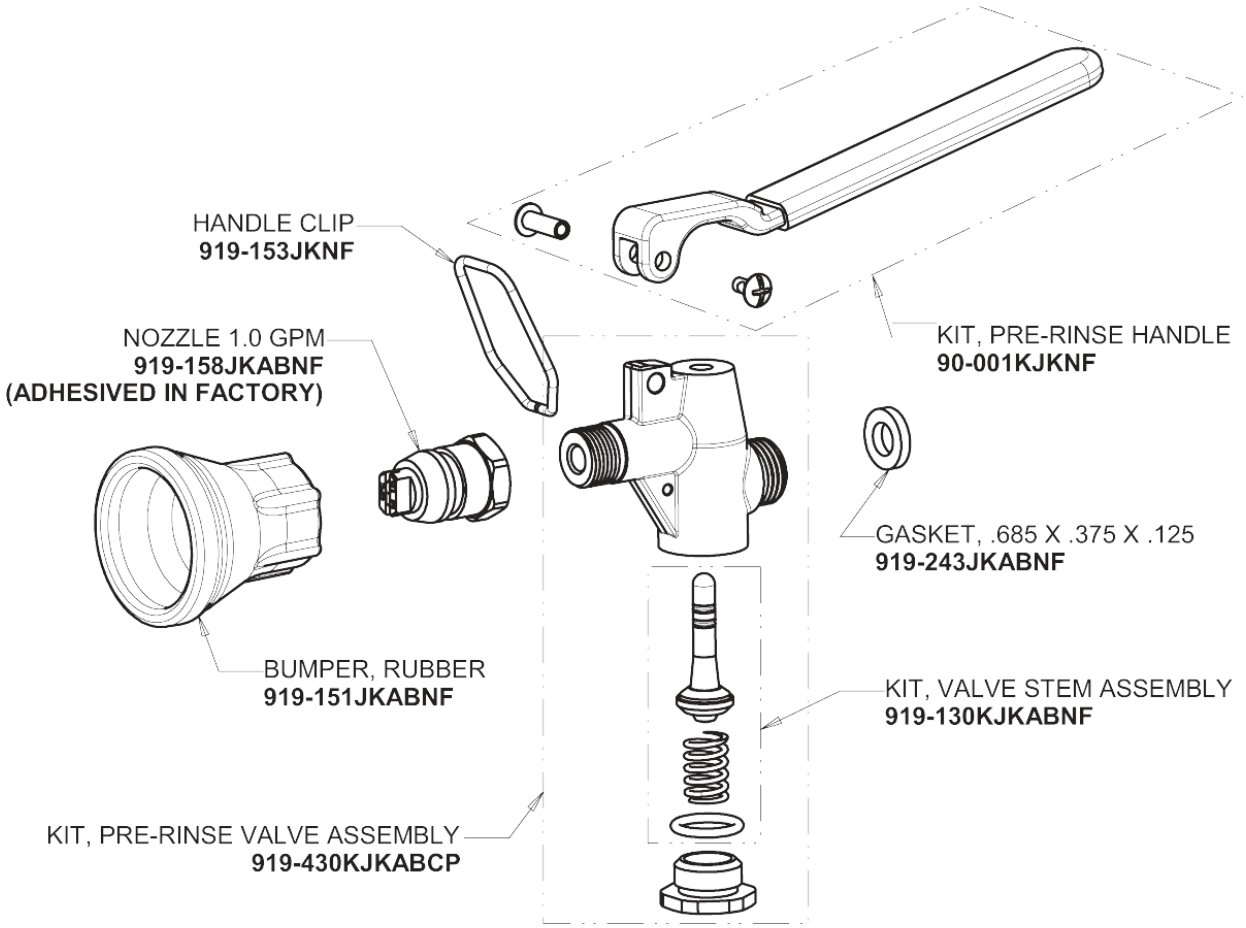

Shank Assembly
748-002KJKABRBF

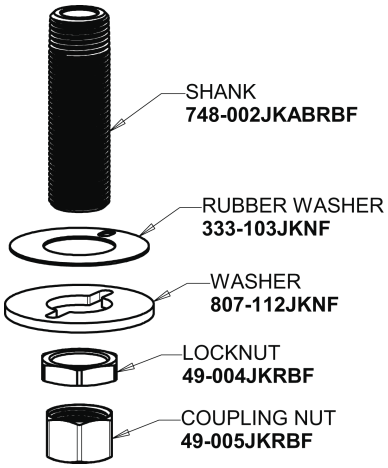

Angle 2-1/2" Inlet Supply Arm
SSJKABCP

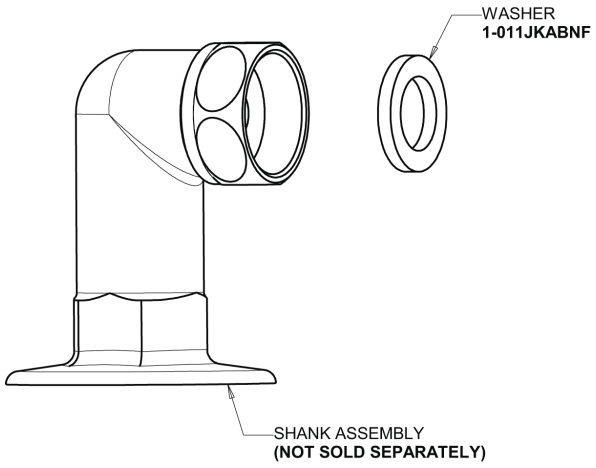

For Technical Assistance:

Phone: 800-TEC-TRUE (832-8783)
Email: techsupport.us@chicagofaucets.com

2100 South Clearwater Drive
Des Plaines, IL 60018
Phone: 847-803-5000
chicagofaucets.com