ROUGHING IN DIMENSIONS MAY VARY AND ARE SUBJECT TO CHANGE. NO RESPONSIBILITY IS ASSUMED FOR USE OF SUPERCEDED OR VOIDED DATA.

CHICAGO FAUCETS®
a Geberit company

2100 South Clearwater Drive
Des Plaines, IL 60018
Phone: 847-803-5000
Fax: 847-803-5454
www.chicagofaucets.com

FOR TECHNICAL ASSISTANCE
1-800-TEC-TRUE (1-800-832-8783)

ROUGH-IN

		FITTING NO. 510-212742AB
BY: SID	DATE: 03-31-16	SUBMITTED MODEL NO.
CHK: SID	REV:	

SUBMITTED AS SHOWN		SUBMITTED AS NOTED		SEE ATTACHED FOR SUBMITTED MODIFICATION	

JOB NAME

ITEM NO.

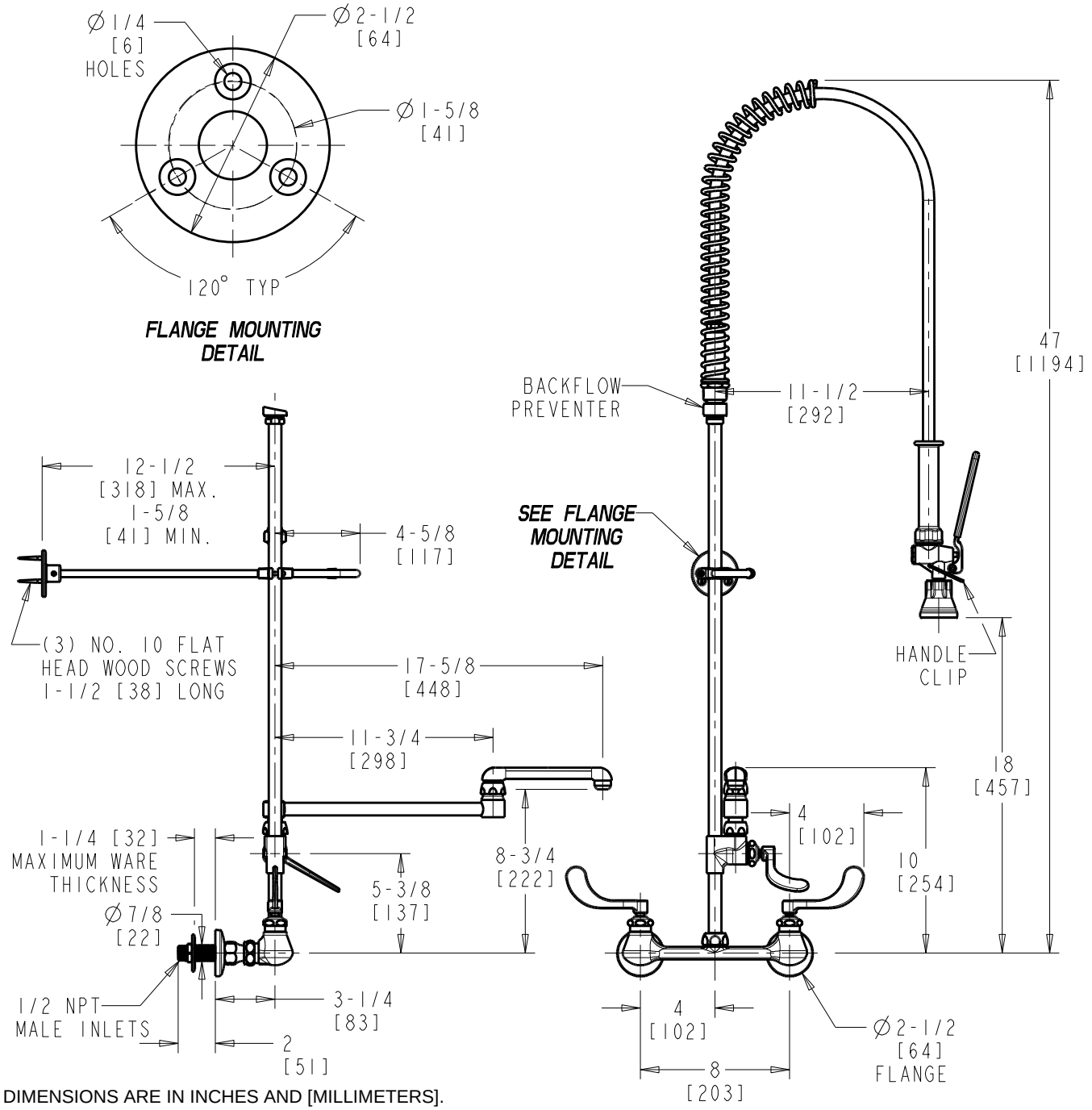

DIMENSIONS ARE IN INCHES AND [MILLIMETERS].

TECHNICAL DATA

- WALL MOUNTED PRE-RINSE SPRAY
- 613-A PRE-RINSE ADAPTA FAUCET
- DJ18 DOUBLE JOINTED SWING SPOUT, E1 QUIXTOP OUTLET
- 317 INDEXED WRISTBLADE HANDLES
- CERAMIC DISC OPERATING CARTRIDGES
- 'WXF' STRAIGHT INLET SUPPLY ARMS WITH WALL FLANGE
- E23 IN-LINE BACKFLOW PREVENTER
- FINISH: CHROME PLATE
- 90-LAB WATER CONSERVING PRE-RINSE SPRAY VALVE
- 1.0 GPM [3.8 L/min.] MAXIMUM FLOW RATE
- 932-001K INLET SHANK ASSEMBLY
- 44" STAINLESS STEEL HOSE, 23" RISER
- INTEGRATED PIPE SUPPPORT & HOOK ASSEMBLY
- ASME A112.18.1/CSA B125.1 COMPLIANT
- ANSI/ASSE 1012 COMPLIANT, CSA B64.8 COMPLIANT
- COMPLIANT TO NSF/ANSI 61, SECTION 9