CHICAGO FAUCETS®
a Geberit company

2100 South Clearwater Drive
Des Plaines, IL 60018
Phone: 847-803-5000
Fax: 847-803-5454
www.chicagofaucets.com

FOR TECHNICAL ASSISTANCE
1-800-TEC-TRUE (1-800-832-8783)

REPAIR PARTS

BY: SID	DATE: 05-07-12
CHK:	REV: 10-07-14

FITTING NO.
333-SLOE12COLDABCP
SUBMITTED MODEL NO.

ITEM NO.

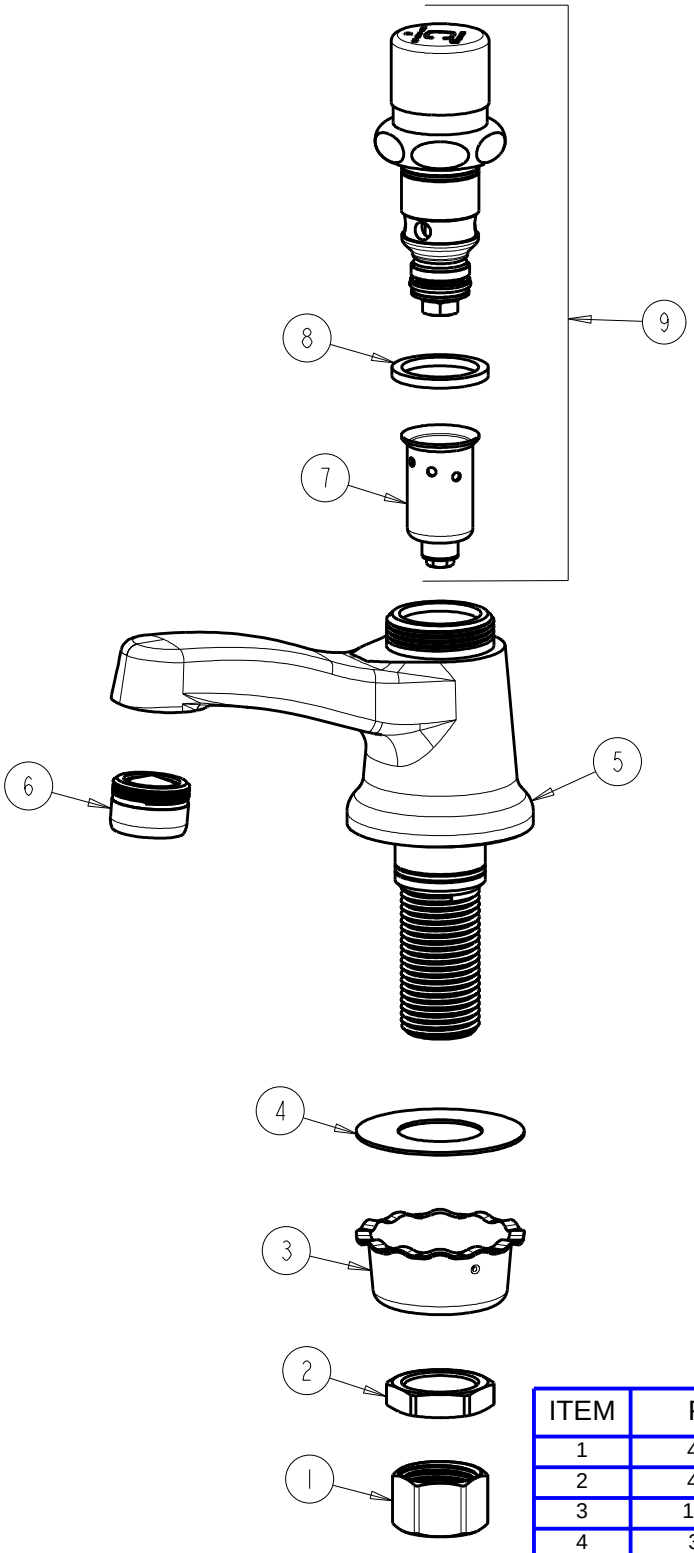

ITEM	PART NO.	DESCRIPTION
1	49-005JKRBF	COUPLING NUT
2	49-004JKRBF	LOCKNUT
3	1797-114JKNF	BASIN COCK WASHER
4	333-103JKNF	RUBBER WASHER
5	------	BODY (NOT SOLD SEPARATELY)
6	E12JKABCP	OUTLET, AERATOR 2.2 GPM
7	333-073KJKABNF	DASHPOT, SLOW
8	1-043JKABNF	GASKET, CAP 1 X .80 X .09
9	333-XSLOCOLDJKABNF	SLOW PUSH BUTTON UNIT