ROUGHING IN DIMENSIONS MAY VARY AND ARE SUBJECT TO CHANGE. NO RESPONSIBILITY IS ASSUMED FOR USE OF SUPERCEDED OR VOIDED DATA.

CHICAGO FAUCETS®
a Geberit company

2100 South Clearwater Drive
Des Plaines, IL 60018
Phone: 847-803-5000
Fax: 847-803-5454
www.chicagofaucets.com

**FOR TECHNICAL ASSISTANCE**
1-800-TEC-TRUE (1-800-832-8783)

# ROUGH-IN

| | |
|---|---|
| BY: JAR | DATE: 07-08-14 |
| CHK: | REV: |

FITTING NO.
350-204168AB

SUBMITTED MODEL NO.

| | | | | | |
|---|---|---|---|---|---|
| SUBMITTED AS SHOWN | | SUBMITTED AS NOTED | | SEE ATTACHED FOR SUBMITTED MODIFICATION | |

JOB NAME

ITEM NO.

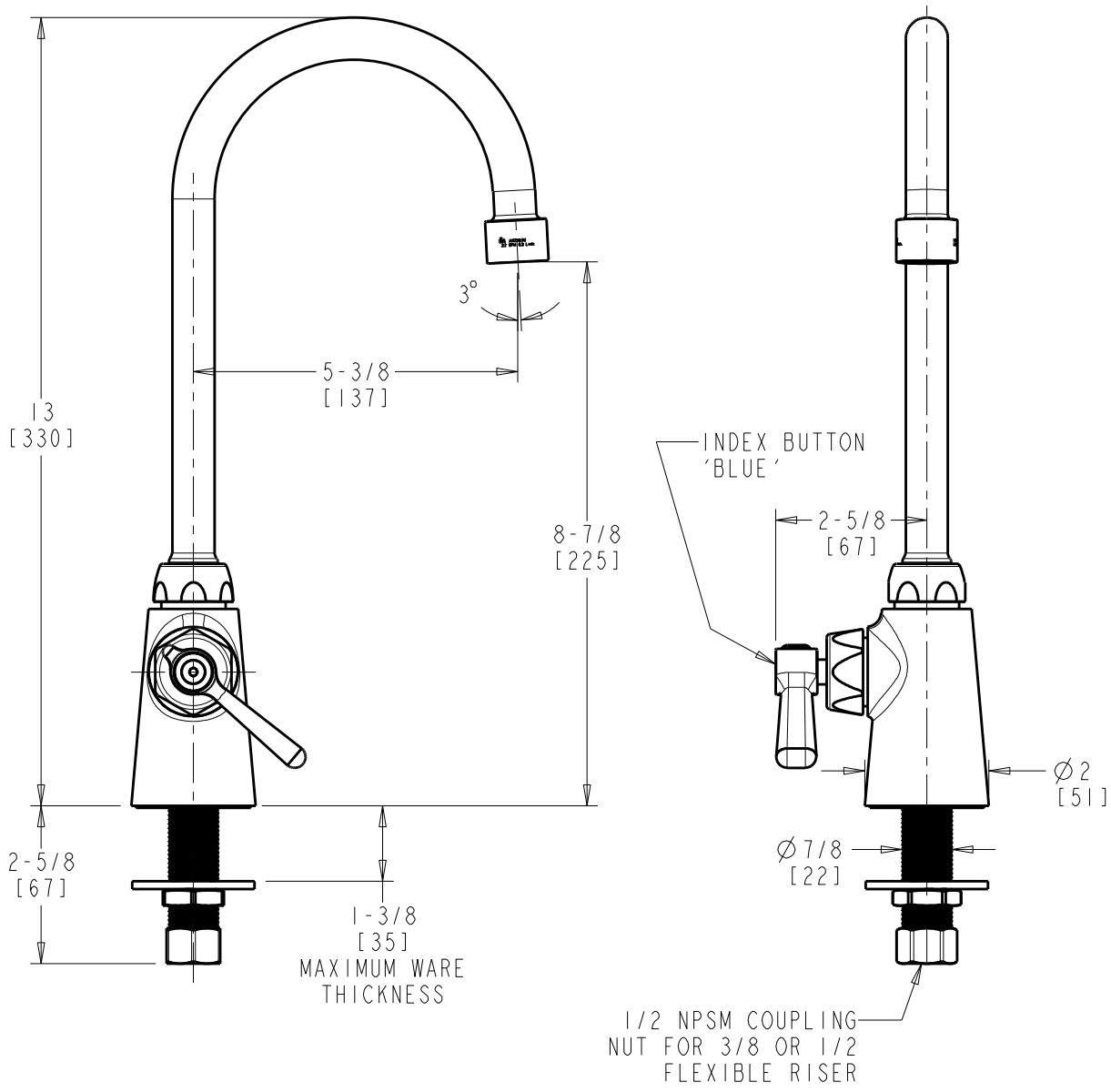


DIMENSIONS ARE IN INCHES AND [MILLIMETERS].

## TECHNICAL DATA

- DECK MOUNTED SINGLE SINK FITTING
- GN2A RIGID/SWING GOOSENECK SPOUT
- 369 INDEXED LEVER HANDLE
- QUATURN OPERATING CARTRIDGE
- E35VP VANDAL RESISTANT SOFTFLO AERATOR
- 1.5 GPM [5.7 L/min.] MAXIMUM FLOW RATE
- FINISH: CHROME PLATE
- ASME A112.18.1/CSA B125.1 COMPLIANT
- COMPLIANT TO NSF/ANSI 61, SECTION 9
- MEETS THE LEAD CONTENT REQUIREMENTS OF: CALIFORNIA, VERMONT AND NSF/ANSI 372
- ADA ANSI/CC A117.1 COMPLIANT
- CALGREEN

ADA COMPLIANT