CHICAGO FAUCETS®
a Geberit company

2100 SOUTH CLEARWATER DRIVE
DES PLAINES, ILLINOIS 60018-5999

FITTING NO.
350-LH
SUBMITTED MODEL NO.

JOB NAME	ITEM NO.

SUBMITTED AS SHOWN	
SUBMITTED AS NOTED	
SEE ATTACHED FOR SUBMITTED MODIFICATION	

ADA COMPLIANT

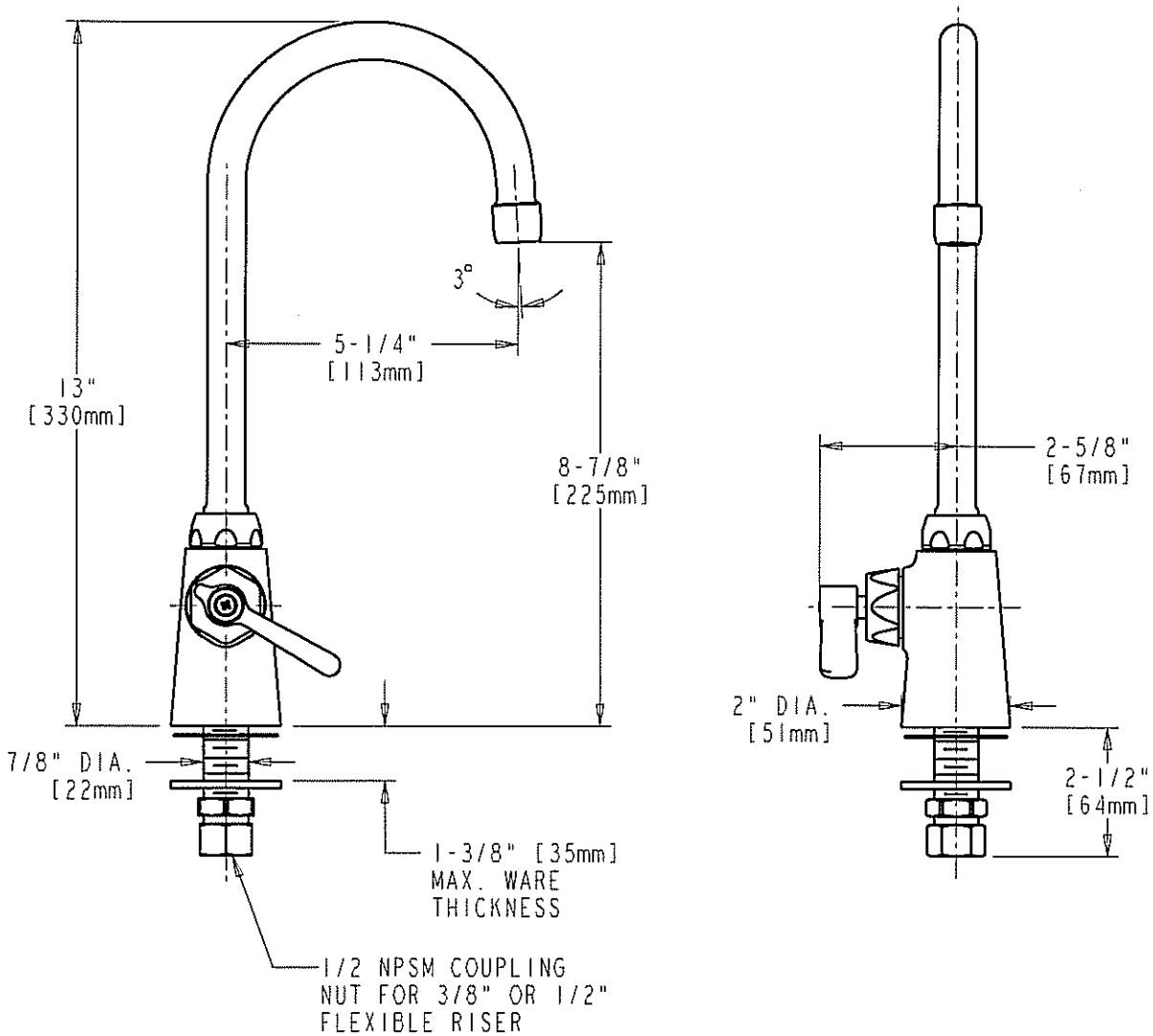

TECHNICAL DATA

- DECK MOUNTED SINGLE SINK FITTING
- GN2A RIGID/SWING GOOSENECK SPOUT
- 369 INDEXED LEVER HANDLE
- QUATURN OPERATING CARTRIDGE
- FINISH: CHROME PLATE
- E3 SOFTFLO AERATOR
- 2.2 GPM [8.3 L/min.] MAXIMUM FLOW RATE
- ASME A112.18.1M COMPLIANT
- CSA B125 COMPLIANT
- NSF 61 COMPLIANT

DATE: 11-30-05
BY: JAR
CHK'D: SAD
APP'D: AT
REV: 11-30-05

350-LH

ROUGHING IN DIMENSIONS MAY VARY AND ARE SUBJECT TO CHANGE. NO RESPONSIBILITY IS ASSUMED FOR USE OF SUPERCEDED OR VOIDED DATA.