ROUGHING IN DIMENSIONS MAY VARY AND ARE SUBJECT TO CHANGE. NO RESPONSIBILITY IS ASSUMED FOR USE OF SUPERCEDED OR VOIDED DATA.

CHICAGO FAUCETS®
a Geberit company

2100 South Clearwater Drive
Des Plaines, IL 60018
Phone: 847-803-5000
Fax: 847-803-5454
www.chicagofaucets.com

FOR TECHNICAL ASSISTANCE
1-800-TEC-TRUE (1-800-832-8783)

ROUGH-IN

FITTING NO.	540-205520
BY: SID	DATE: 07-07-16
SUBMITTED MODEL NO.	
CHK:	REV:

SUBMITTED AS SHOWN		SUBMITTED AS NOTED		SEE ATTACHED FOR SUBMITTED MODIFICATION	

JOB NAME

ITEM NO.

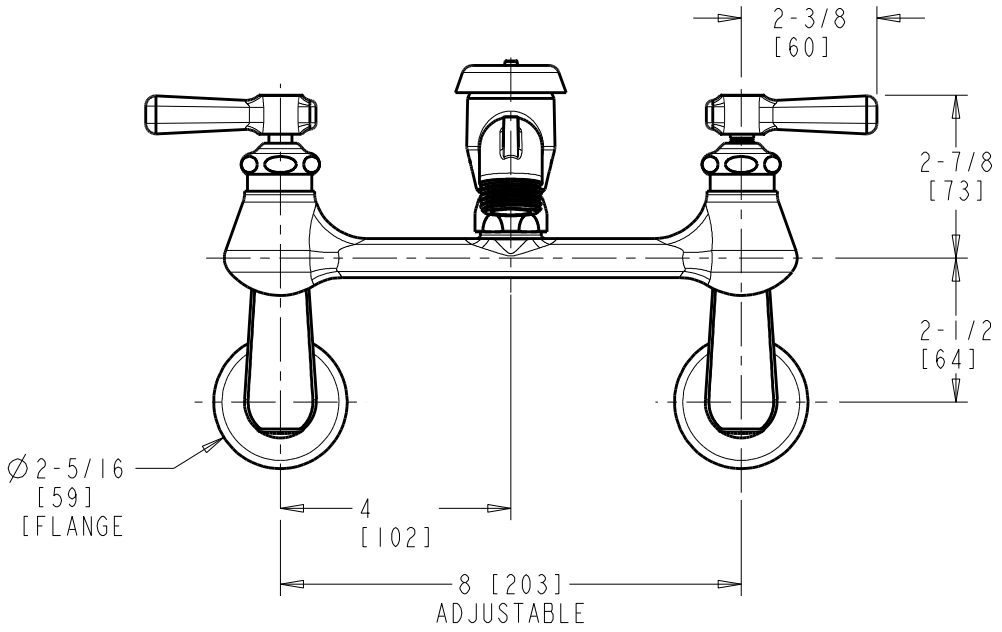

FRONT VIEW

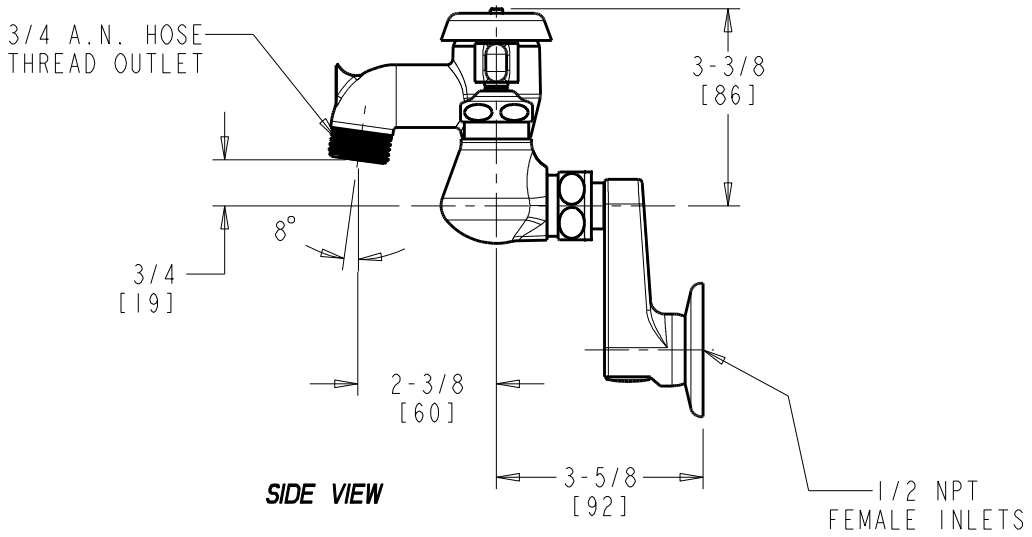

SIDE VIEW

DIMENSIONS ARE IN INCHES AND [MILLIMETERS].

TECHNICAL DATA

- WALL MOUNTED FITTING
- 305-SVB SERVICE SINK VACUUM BREAKER SPOUT
- 369 INDEXED LEVER HANDLES
- CERAMIC DISC OPERATING CARTRIDGES
- 'RC' SUPPLY ARMS WITH BUILT-IN SHUT-OFF STOP AND CHECK
- FINISH: CHROME PLATE
- ASME A112.18.1/CSA B125.1 COMPLIANT
- ADA ANSI/ICC A117.1 COMPLIANT
- ASSE 1001 COMPLIANT
- CSA B64.1.1 COMPLIANT

ADA COMPLIANT