Manual Sink Faucets
540-LD897SXKCCP

Product Type

Wall-mounted manual sink faucet with adjustable centers

Features & Specifications

- 2-5/16" diameter slip flange
- 8" body, adjustable arms 7-1/4" - 8-3/4" centers
- 5-3/4" rigid vacuum breaker spout with 3/4" male hose thread and pail hook
- Vandal Proof 2-3/8" lever handle
- Ceramic 1/4-turn operating cartridge with integrated check valve, right-hand
- Ceramic 1/4-turn operating cartridge with integrated check valve, left-hand
- Complies with the requirements of the Buy American Act of 1933.

Performance Specification

- Rated Operating Pressure: 20-125 PSI
- Rated Operating Temperature: 40-140°F

Warranty

- 5-Year Limited Cartridge Warranty
- Lifetime Limited Faucet Warranty
- 1-Year Limited Finish Warranty

Codes & Standards

- ADA ANSI/ICC A117.1
- WARNING: This product can expose you to lead, which is known to the State of California to cause cancer and birth defects or other reproductive harm. For more information go to www.P65Warnings.ca.gov.

Job Name _____

Item Number _____

Section/Tag _____

Model Specified _____

Architect _____

Engineer _____

Contractor _____

[ ] Submitted as Shown [ ] Submitted with Variations

Date _____



2100 South Clearwater Drive
Des Plaines, IL
P: 847/803-5000
F: 847/803-5454
Technical: 800/TEC-TRUE
www.chicagofaucets.com

540-LD897SXKCCP

Architect/Engineer Specification

Chicago Faucets No. 540-LD897SXKCCP, Sink Faucet for hot and cold water, wall-mounted with adjustable arms for 7-1/4" - 8-3/4" centers. Chrome plated. Rigid spout with vacuum breaker, 3/4" male hose thread, and pail hook, 5-3/4" center-to-center. 2-3/8" metal, vandal-proof, lever handles with sixteen-point, tapered broach and secured blue and red index buttons. Ceramic quarter-turn cartridge with integrated check valve, features square, tapered stem. 3/8" offset inlet supply arm with 1/2" NPT female thread inlet. 2-5/16" diameter slip flange. NOTE: Atmospheric vacuum breaker is NOT intended for continuous pressure applications. This product meets ADA ANSI/ICC A117.1 requirements and is tested and certified to industry standards: ASME A112.18.1/CSA B125.1, and Certified to NSF/ANSI 61, Section 9 by CSA.

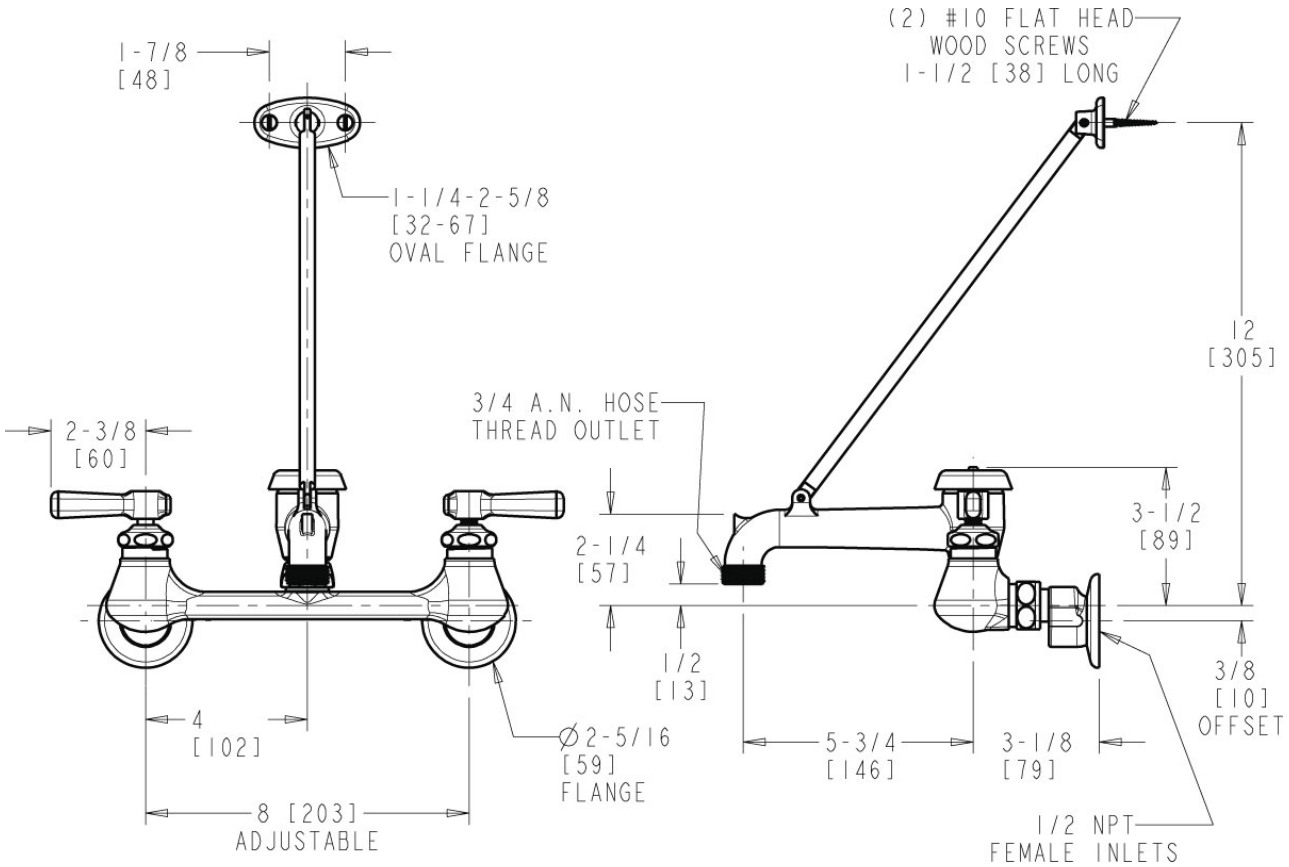

Operation and Maintenance

Installation should be in accordance with local plumbing codes. Flush all pipes thoroughly before installation. After installation, remove spout outlet or flow control and flush faucet thoroughly to clear any debris. Care should be taken when cleaning the product. Do not use abrasive cleaners, chemicals or solvents as they can result in surface damage. Use mild soap and warm water for cleaning and protecting the life of Chicago Faucet products. For specific operation and maintenance refer to the installation instructions and repair parts documents that are located at www.chicagofaucets.com.

Chicago Faucets, member of the Geberit Group, is the leading brand of commercial faucets and fittings in the United States, offering a complete range of products for schools, laboratories, hospitals, office buildings, food service, airports and sport facilities. Call 1.800.TECTRUE or 1.847.803.5000 Option 1 for installation or other technical assistance.

2100 South Clearwater Drive
Des Plaines, IL
P: 847/803-5000
F: 847/803-5454
Technical: 800/TEC-TRUE
www.chicagofaucets.com