Repair Parts

EQ-A11B-23ABCP

EQ Curved Series Lavatory Sink Faucet with Hands-free Infrared Detection

CHICAGO FAUCETS
a Geberit company

EQ-23KJKABNF EQ Control Box, SSPS, Thermostatic Mixer

Base Parts:

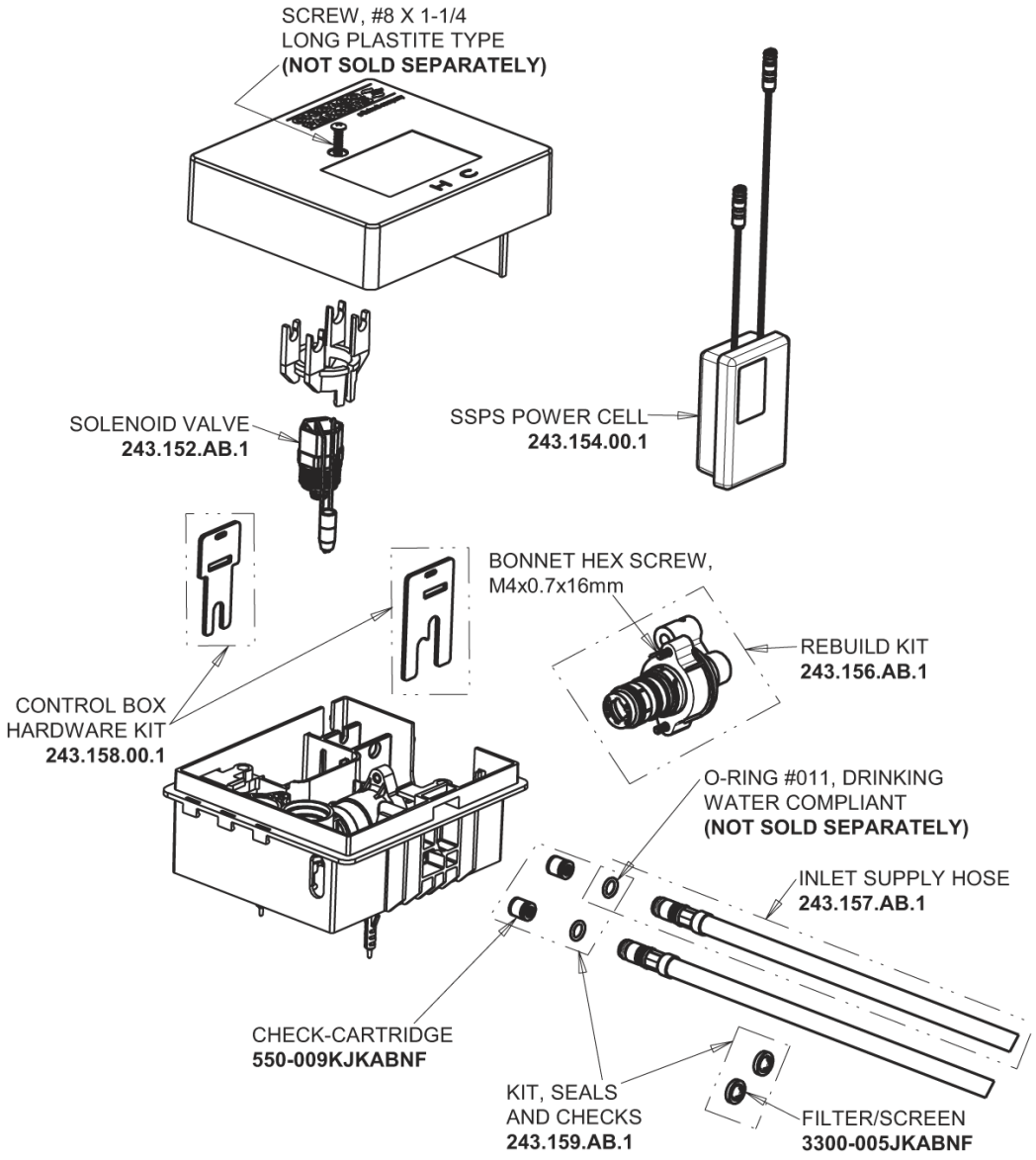

Polished Chrome EQ Curved Spout, 1.0 GPM
EQ-A11B-KJKABCP

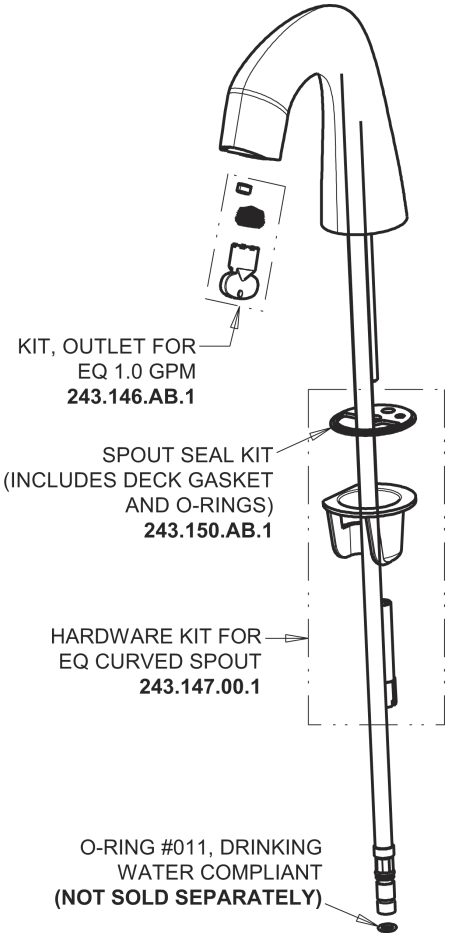

For Technical Assistance:

Phone: 800-TEC-TRUE (832-8783)
Email: techsupport.us@chicagofaucets.com

2100 South Clearwater Drive
Des Plaines, IL 60018
Phone: 847-803-5000
chicagofaucets.com