ROUGHING IN DIMENSIONS MAY VARY AND ARE SUBJECT TO CHANGE. NO RESPONSIBILITY IS ASSUMED FOR USE OF SUPERCEDED OR VOIDED DATA.

CHICAGO FAUCETS®
a Geberit company

2100 South Clearwater Drive
Des Plaines, IL 60018
Phone: 847-803-5000
Fax: 847-803-5454
www.chicagofaucets.com

FOR TECHNICAL ASSISTANCE
1-800-TEC-TRUE (1-800-832-8783)

ROUGH-IN

		FITTING NO. 631-214239
BY: SID	DATE: 10-03-16	SUBMITTED MODEL NO.
CHK:	REV:	

SUBMITTED AS SHOWN		SUBMITTED AS NOTED		SEE ATTACHED FOR SUBMITTED MODIFICATION	

JOB NAME

ITEM NO.

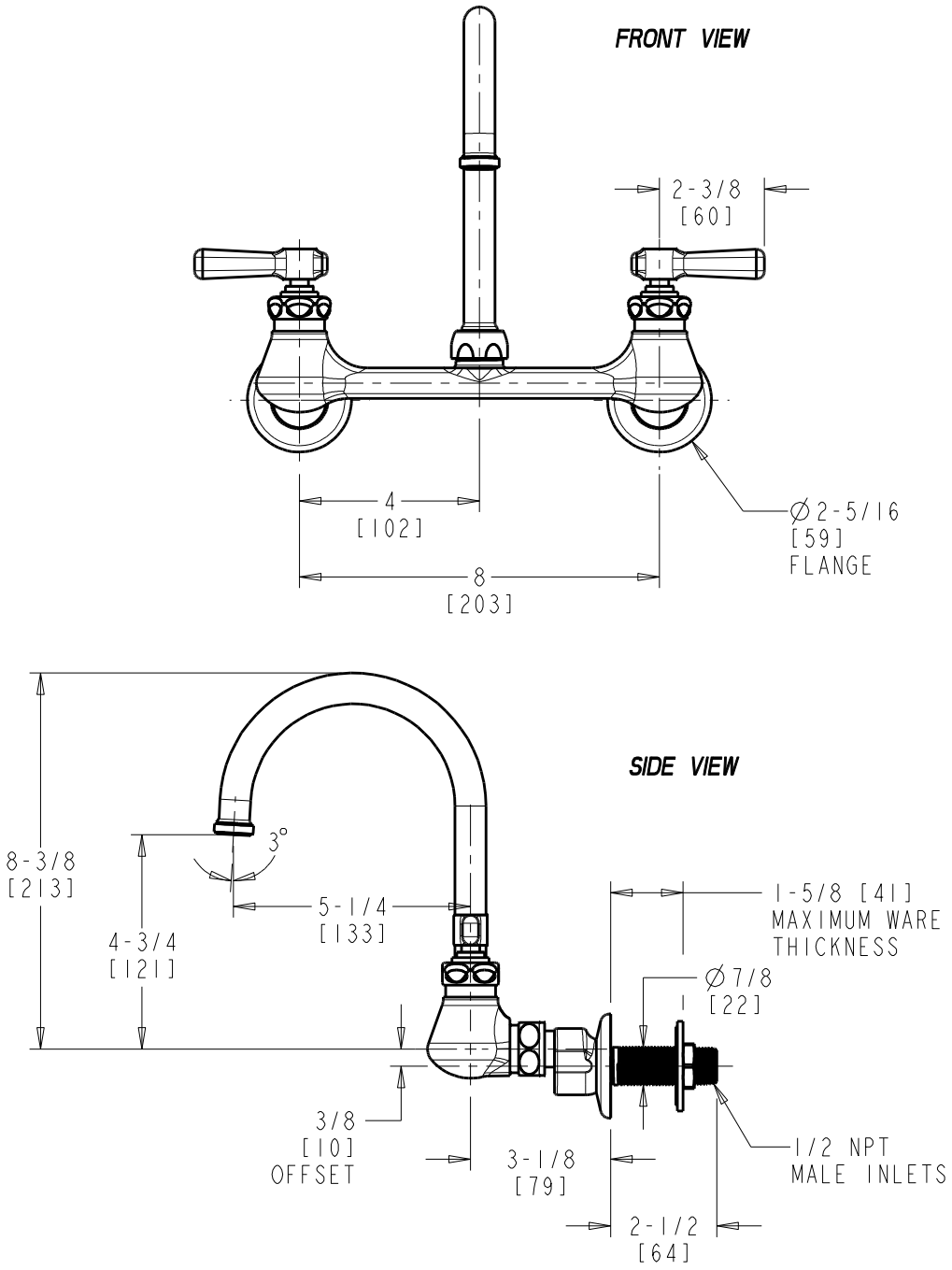

DIMENSIONS ARE IN INCHES AND [MILLIMETERS].

TECHNICAL DATA

- WALL MOUNTED SINK FITTING
- GN2AH8FC RIGID/SWING GOOSENECK SPOUT
- 369 INDEXED LEVER HANDLES
- 826-X KLO-SELF OPERATING CARTRIDGES
- 'GC' OFFSET ARMS WITH INTEGRAL CHECK
- FINISH: CHROME PLATE
- SPOUT END RING
- LAMINAR FLOW CONTROL DEVICE IN SPOUT
- 1.5 GPM [5.7 L/min.] MAXIMUM FLOW RATE
- 932-001K INLET SHANK ASSEMBLY
- ASME A112.18.1/CSA B125.1 COMPLIANT
- ADA ANSI/ICC A117.1 COMPLIANT

ADA COMPLIANT