Repair Parts

EQ-A11B-21ABCP

EQ Curved Series Lavatory Sink Faucet with Hands-free Infrared Detection

CHICAGO FAUCETS
a Geberit company

EQ-21KJKABNF EQ Control Box, SSPS, Single-Supply

Base Parts:

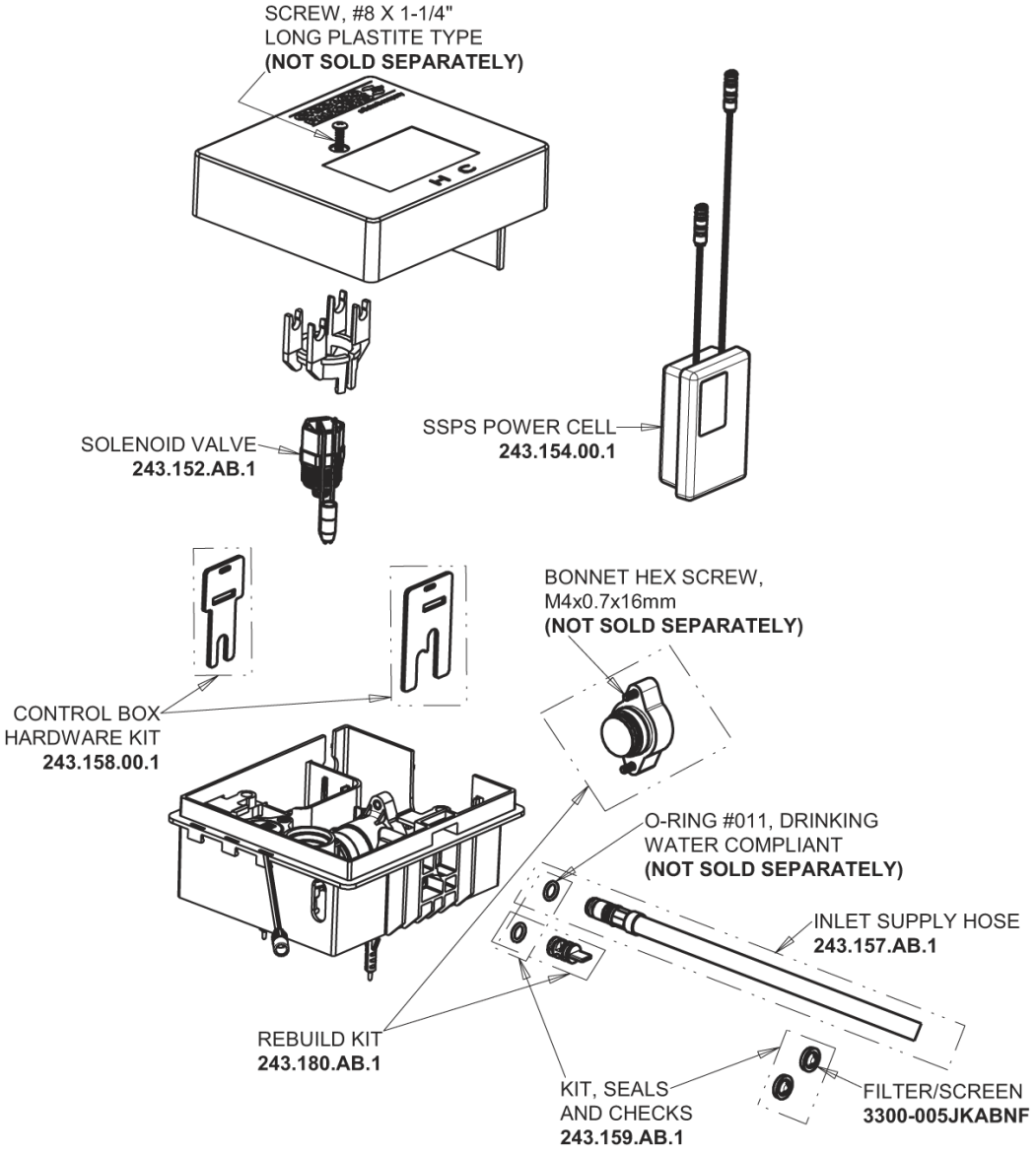

Brushed Nickel EQ Curved Spout, 1.0 GPM
EQ-A11B-KJKABBN

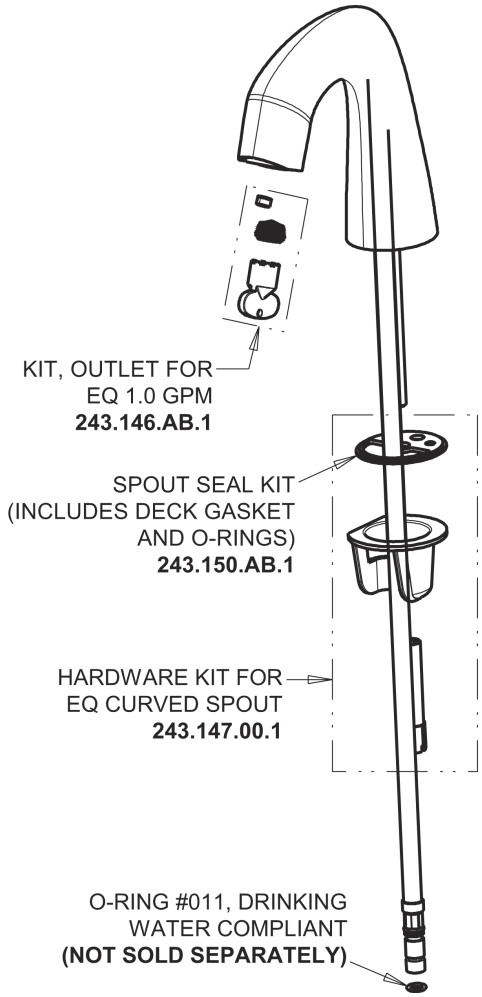

For Technical Assistance:

Phone: 800-TEC-TRUE (832-8783)
Email: techsupport.us@chicagofaucets.com

2100 South Clearwater Drive
Des Plaines, IL 60018
Phone: 847-803-5000
chicagofaucets.com