MECHANICAL FAUCETS

2305-VB613AABCP

Pre-Rinse Fittings

Product Type

Deck Mounted Single Hole Deck Mounted Pre-Rinse Fitting

Features & Specifications

- Single Hole
- 1.0 GPM @ 60 PSI Spray Valve
- 2-3/4" Lever Handles
- Ceramic Volume Control and Hot Water Limit Stop Cartridges
- Secondary Control Valve
  - 9-1/2" L Type Swing Spout
  - Full Flow Outlet
  - Quaturn Compression Operating Cartridges
- 3/8" Compression Flexible Stainless Steel Supply Hoses
- 23" Riser with Spring Guide
- 44" Flexible Stainless Steel Hose with Insulated Handle
- E23JKCP In-line back flow preventer to prevent the flow of contaminated water back into the potable water supply
- Pipe Strap and Hook Assembly
- ECAST® design provides durable construction with total lead content equal to or less than 0.25% by weighted average

Performance Specification

- Rated Operating Pressure: 20-125 PSI
- Rated Operating Temperature: 40-140ºF

Warranty

- Lifetime Limited Faucet Warranty
- 5-Year Limited Cartridge Warranty
- 1-Year Limited Finish Warranty

Codes & Standards

- ASME A112.18.1/CSA B125.1
- Certified to NSF/ANSI 61, Section 9 by CSA
- California Health and Safety Code 116875 (AB1953-2006)
- Vermont Bill S.152
- NSF/ANSI 372 Low Lead Content

Job Name _____

Item Number _____

Section/Tag _____

Model Specified _____

Architect _____

Engineer _____

Contractor _____

[ ] Submitted as Shown [ ] Submitted with Variations

Date _____



ECAST

ECAST products are intended for installation where state laws and local codes mandate lead content levels or in any location where lead content is a concern.

2100 South Clearwater Drive
Des Plaines, IL
P: 847/803-5000
F: 847/803-5454
Technical: 800/TEC-TRUE
www.chicagofaucets.com

2305-VB613AABCP

Pre-Rinse Fittings

Architect/Engineer Specification

Chicago Faucets No. 2305-VB613AABCP, Pre-Rinse Fitting, single lever, two-hole deck mount, chrome plated. Water conserving pre-rinse spray valve, 1.0 GPM @ 60 PSI. 2-3/4" metal lever handle. Ceramic quarter-turn cartridge, features square, tapered stem. Flexible stainless steel supply hoses with 3/8" compression fitting. 23" riser with spring guide. 44" flexible stainless steel hose with insulated handle. E23JKCP in-line back flow preventer to prevent the flow of contaminated water back into the potable water supply. Pipe strap and hook assembly. ECAST® construction with less than 0.25% lead content by weighted average. Full-flow Quixtop outlet with single-screen design. Quaturn™ rebuildable compression cartridge, opens and closes 90°, closes with water pressure, features square, tapered stem. This product is tested and certified to industry standards: ASME A112.18.1/CSA B125.1, Certified to NSF/ANSI 61, Section 9 by CSA, California Health and Safety Code 116875 (AB1953-2006), Vermont Bill S.152, and NSF/ANSI 372 Low Lead Content.

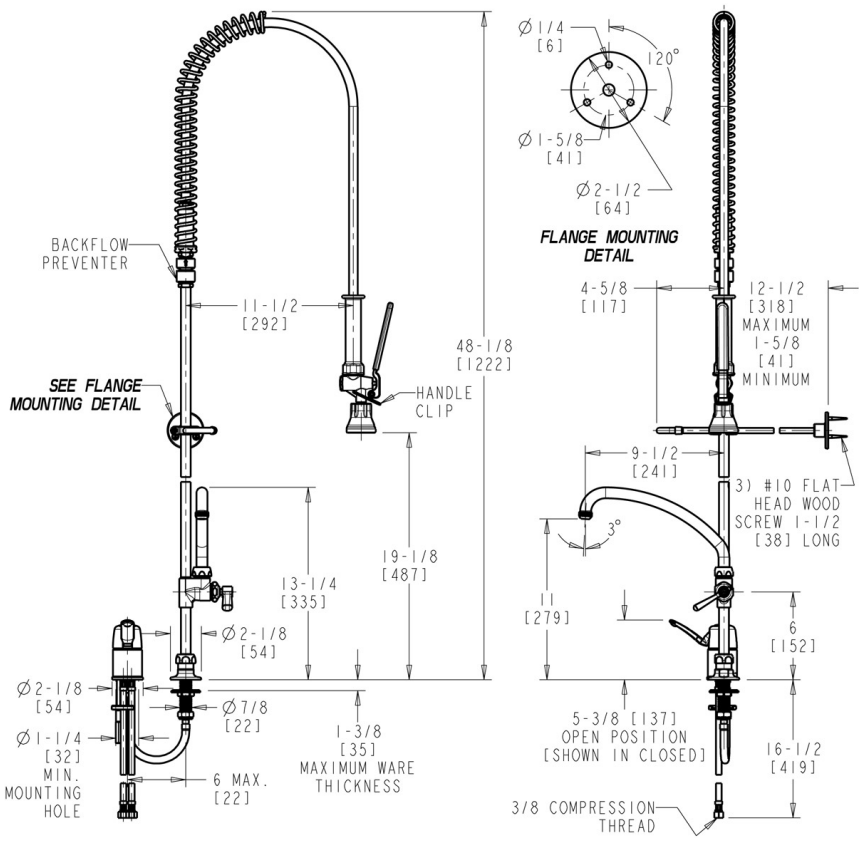

Operation and Maintenance

Installation should be in accordance with local plumbing codes. Flush all pipes thoroughly before installation. After installation, remove spout outlet or flow control and flush faucet thoroughly to clear any debris. Care should be taken when cleaning the product. Do not use abrasive cleaners, chemicals or solvents as they can result in surface damage. Use mild soap and warm water for cleaning and protecting the life of Chicago Faucet products. For specific operation and maintenance refer to the installation instructions and repair parts documents that are located at www.chicagofaucets.com.

Chicago Faucets, member of the Geberit Group, is the leading brand of commercial faucets and fittings in the United States, offering a complete range of products for schools, laboratories, hospitals, office buildings, food service, airports and sport facilities. Call 1.800.TECTRUE or 1.847.803.5000 Option 1 for installation or other technical assistance.

2100 South Clearwater Drive
Des Plaines, IL
P: 847/803-5000
F: 847/803-5454
Technical: 800/TEC-TRUE
www.chicagofaucets.com