CHICAGO FAUCETS®
a Geberit company

2100 South Clearwater Drive
Des Plaines, IL 60018
Phone: 847-803-5000
Fax: 847-803-5454
www.chicagofaucets.com

FOR TECHNICAL ASSISTANCE
1-800-TEC-TRUE (1-800-832-8783)

REPAIR PARTS

BY: SID	DATE: 09-25-14
CHK:	REV:

FITTING NO.
349-L9ABCP
SUBMITTED MODEL NO.

ITEM NO.

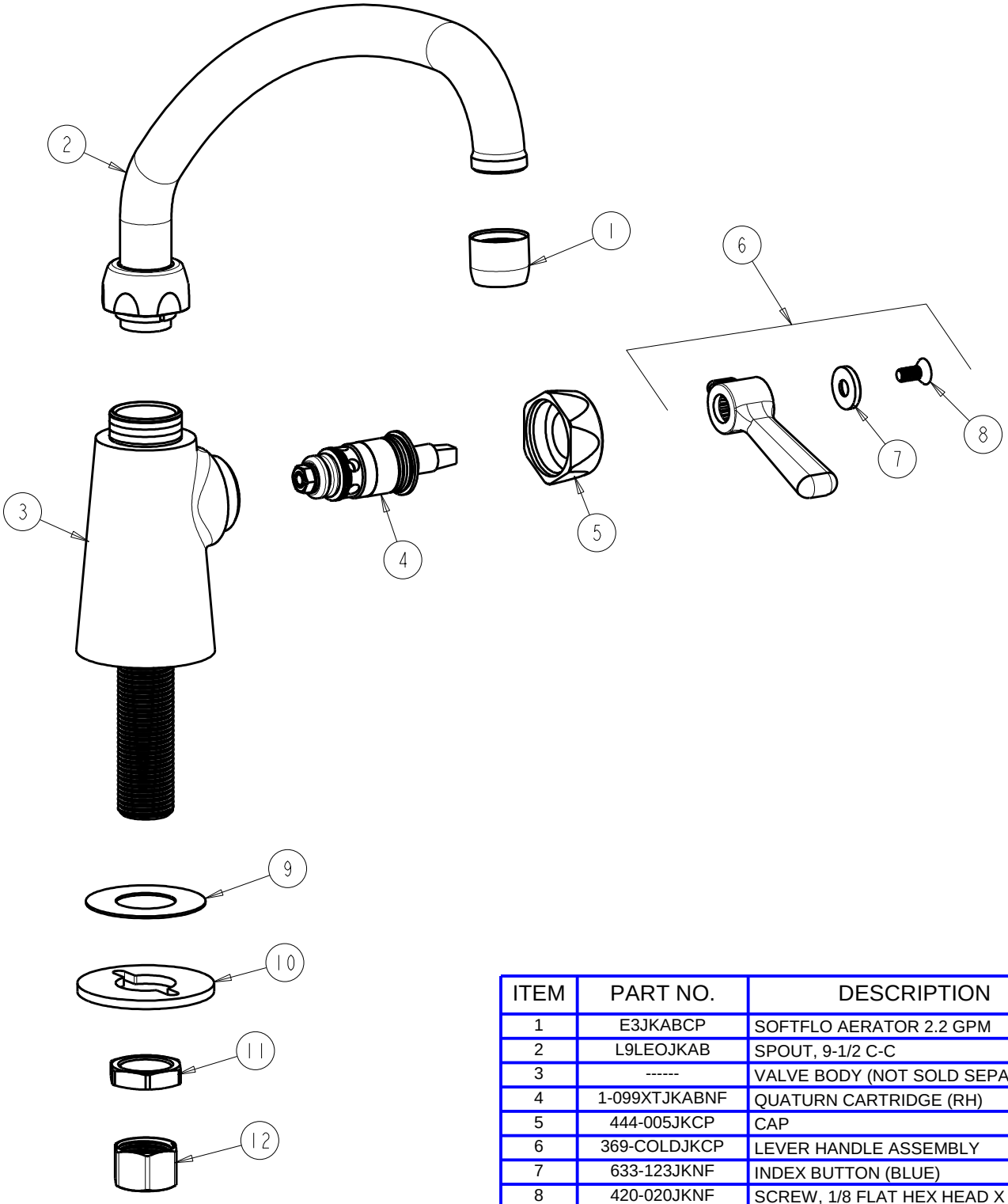

ITEM	PART NO.	DESCRIPTION
1	E3JKABCP	SOFTFLO AERATOR 2.2 GPM
2	L9LEOJKAB	SPOUT, 9-1/2 C-C
3	------	VALVE BODY (NOT SOLD SEPARATELY)
4	1-099XTJKABNF	QUATURN CARTRIDGE (RH)
5	444-005JKCP	CAP
6	369-COLDJKCP	LEVER HANDLE ASSEMBLY
7	633-123JKNF	INDEX BUTTON (BLUE)
8	420-020JKNF	SCREW, 1/8 FLAT HEX HEAD X 1/2
9	333-103JKNF	RUBBER WASHER
10	807-112JKNF	WASHER
11	49-004JKRBF	LOCKNUT
12	49-005JKRBF	COUPLING NUT