CHICAGO® FAUCETS

2100 SOUTH CLEARWATER DRIVE
DES PLAINES, ILLINOIS 60018-5999
708-803-5000

FITTING NO.

445R

SUBMITTED MODEL NO.

JOB NAME

ITEM NO.

SUBMITTED AS SHOWN	
SUBMITTED AS NOTED	
SEE ATTACHED FOR SUBMITTED MODIFICATION	

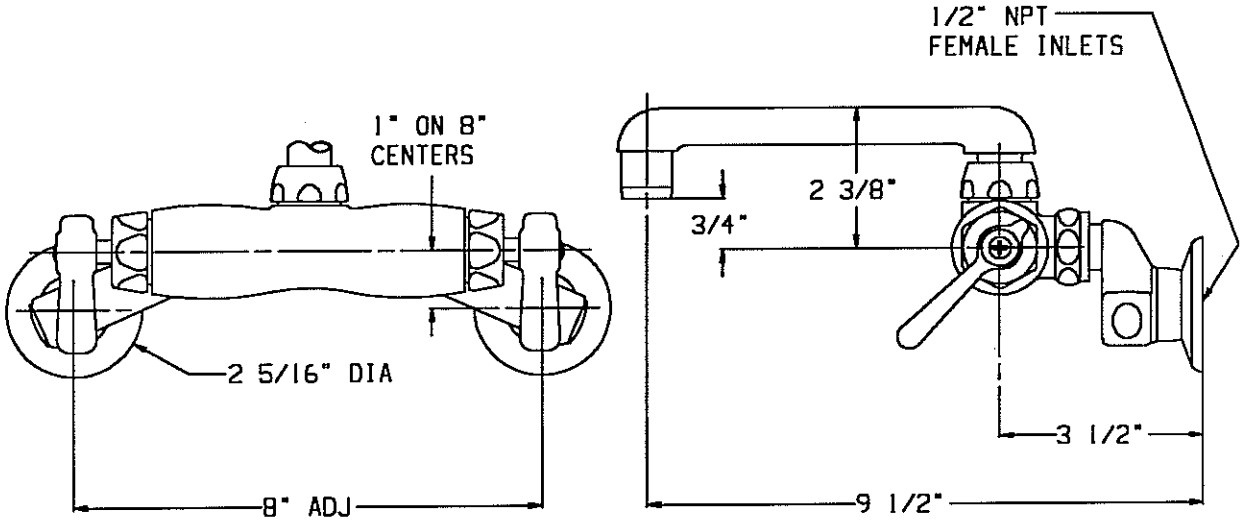

TECHNICAL DATA

- WALL MOUNTED SINK FAUCET
- S6 SWING SPOUT
- 369 INDEXED LEVER HANDLES
- QUATURN UNITS
- 'R' OFFSET INLET SUPPLY ARMS WITH BUILT-IN SHUT-OFF STOPS
- FINISH AS SPECIFIED
- E3 SOFTFLO OUTLET
- 2.0 GPM - 7.6 L/min @ 80 PSI
- ANSI A112.18.1
- CSA B125

DATE: 10-27-94
BY:
CHK'D: DT
APP'D:
REV:

445R

ROUGHING IN DIMENSIONS MAY VARY AND ARE SUBJECT TO CHANGE. NO RESPONSIBILITY IS ASSUMED FOR USE OF SUPERCEDED OR VOIDED DATA. (0192-1)