Repair Parts

509-SSVBL12XKCAB

Pre-Rinse Fitting with 613-A Adapta-Faucet

CHICAGO FAUCETS
a Geberit company

Base Parts:

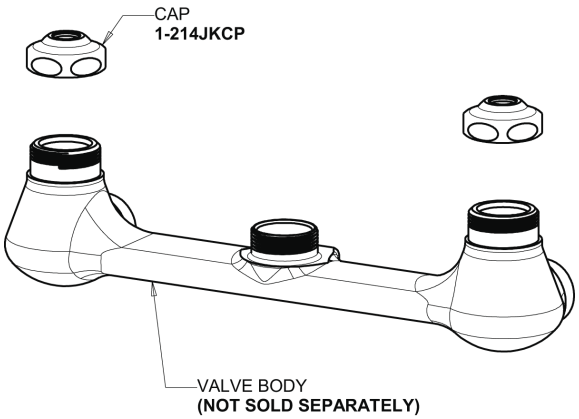

2-3/8" Lever Handle
369-PRJKCP

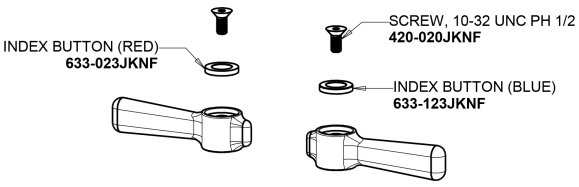

Adapta-Faucet with Pre-Rinse Hose and Handle
Includes spout, elbow, vacuum breaker

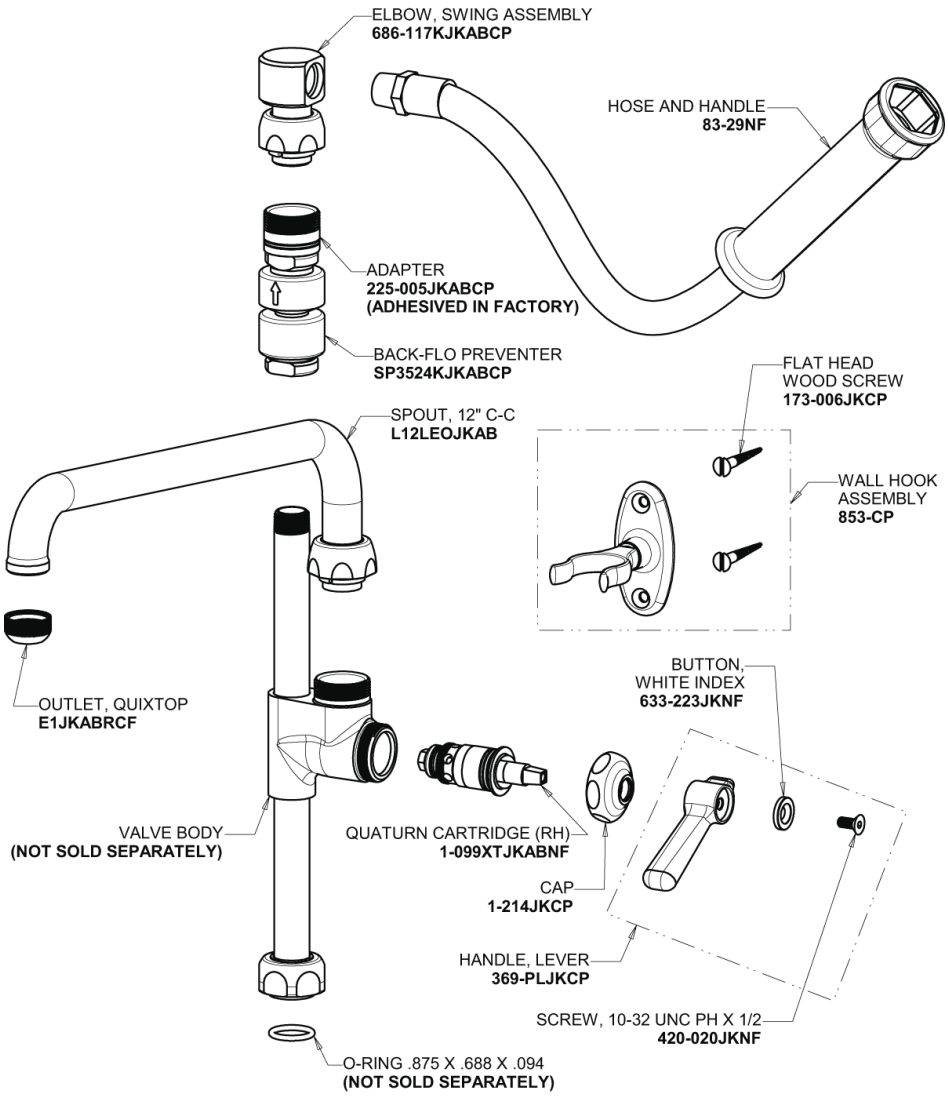

For Technical Assistance:

Phone: 800-TEC-TRUE (832-8783)

Email: techsupport.us@chicagofaucets.com

2100 South Clearwater Drive
Des Plaines, IL 60018
Phone: 847-803-5000
chicagofaucets.com

Repair Parts

509-SSVBL12XKCAB

Pre-Rinse Fitting with 613-A Adapta-Faucet

CHICAGO FAUCETS
a Geberit company

Pre-Rinse Spray Valve
90-ANGABCP

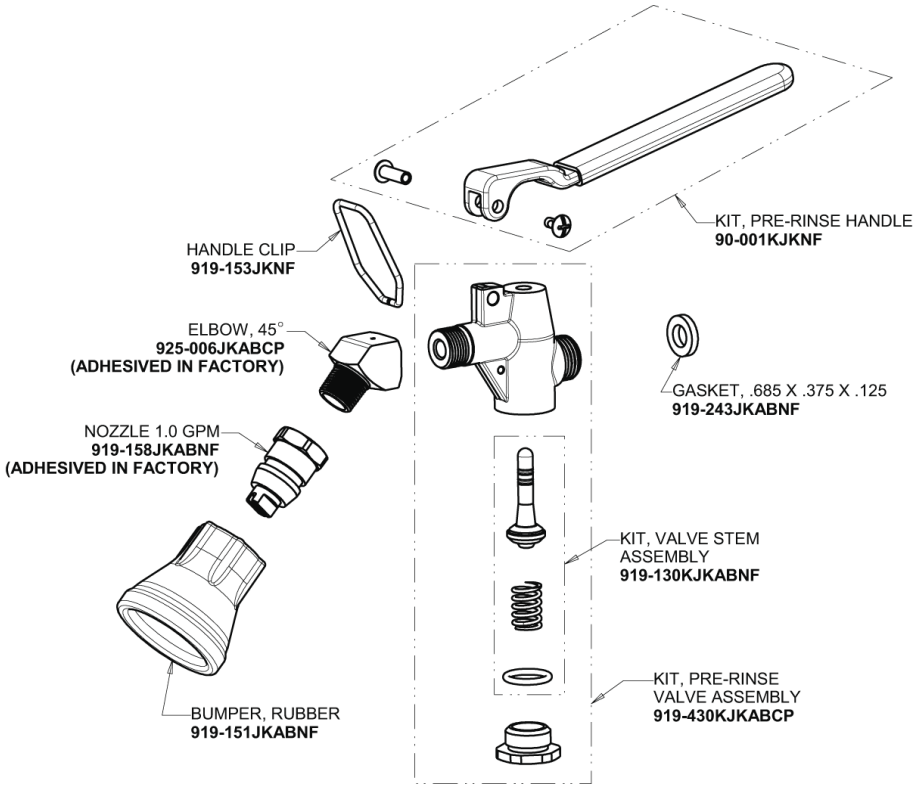

Shank Assembly
748-002KJKABRBF

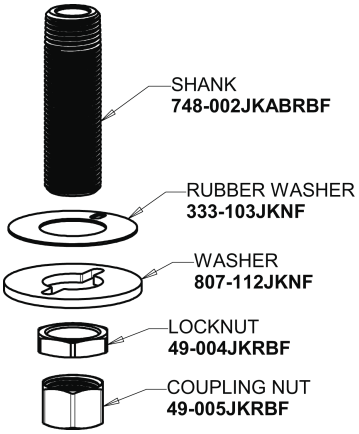

Ceramic 1/4-Turn Cartridge with Check Valve (pair)
1-099XKCJKABNF (right)
1-100XKCJKABNF (left)

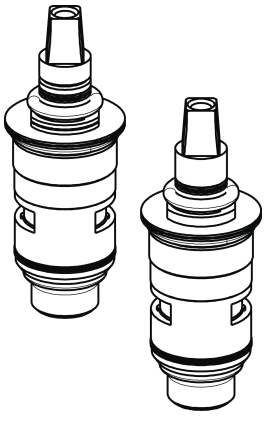

Angle 2-1/2" Inlet Supply Arm
SSJKABCP

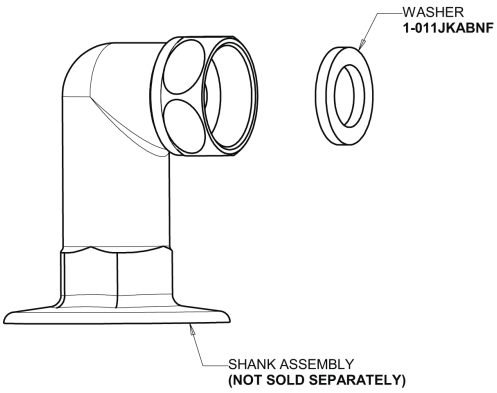

For Technical Assistance:

Phone: 800-TEC-TRUE (832-8783)
Email: techsupport.us@chicagofaucets.com

2100 South Clearwater Drive
Des Plaines, IL 60018
Phone: 847-803-5000
chicagofaucets.com