SUBMITTAL DATA SHEET

No-Lead Specialty Valves / Fittings
Washing Machine Valve – 72113S

SWT x G.H.T.



A.Y. McDonald Mfg. Co. carries a full line of No-Lead Industrial & Specialty valves and fittings. Refer to the parts description for proper application.

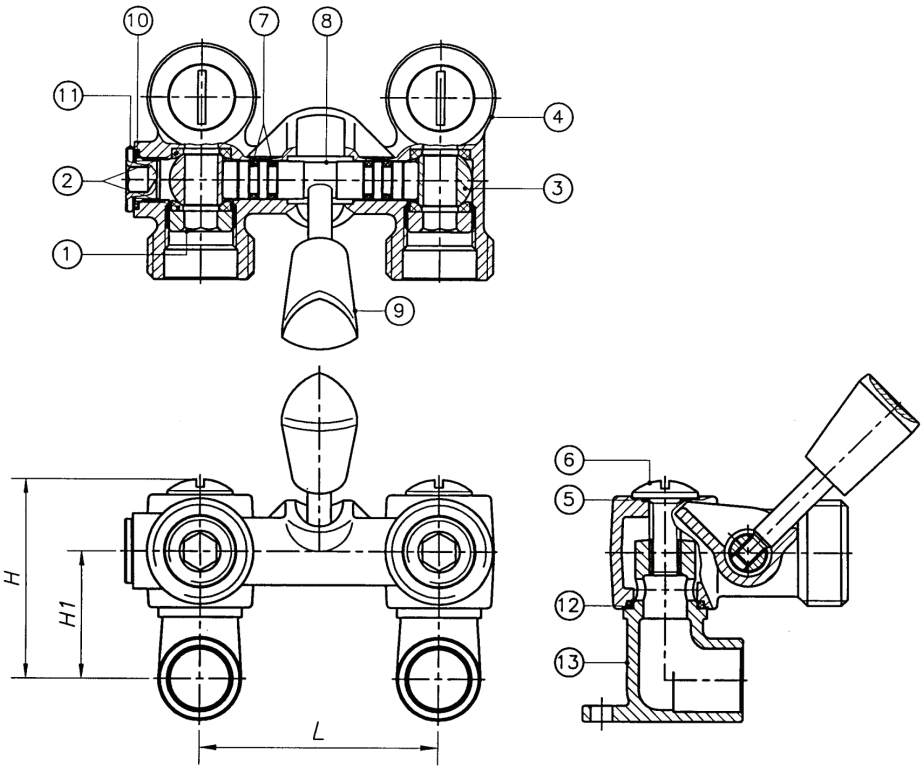

Dimensions

Size	L	H	H1
1/2" & 1/2" x 3/4"	2.36	1.99	1.26

Materials

No.	Part	Material
1	Locknut	No-Lead Brass
2	Ball Packing	Teflon
3	Ball	No-Lead Brass
4	Body	No-Lead Brass
5	O-ring	Rubber
6	Bolt	Stainless Steel
7	O-ring	Rubber
8	Stem	No-Lead Brass
9	Handle	Stainless Steel
10	O-ring	Rubber
11	Packing Nut	No-Lead Brass
12	O-ring	Rubber
13	Nipple	No-Lead Brass

SUBMITTAL INFORMATION

- Sizes: 1/2"
- 150 PSI
- Complies with NSF / ANSI 372-2010
- Used to manually control hot and cold water flow and pressure to flexible hoses feeding washing machines.

NO-LEAD: The weighted average of the wetted surface of this no-lead product contacted by consumable water contains less than one quarter of one percent (0.25%) lead.

A.Y. McDonald Mfg. Co.
P.O. Box 508
Dubuque, IA 52004-0508

Toll Free: 1-800-292-2737
Fax: 1-800-832-9296
Hours: 7:00 a.m. - 5:00 p.m., CST

sales@aymcdonald.com
www.aymcdonald.com

A.Y. McDonald considers the information on this assembly drawing correct when published. Item and option availability, including specifications, are subject to change without notice.

Submitted by: