SUBMITTAL DATA SHEET

Sump, Sewage, & Effluent Pumps

DuraMAC™ | Guardian

5050CTSJPACSL Sewage Pump



3 YEAR LIMITED WARRANTY

See Pumps & Accessories Price List for Limited Warranty details.

This pre-assembled simplex sewage package is designed to be used in any residential sewage application. With a 30 gallon capacity, 2" solids handling, and a 2" discharge pipe connected to the sewage pump, the package is ready to installed. Special feature is the split lid for easy access to pump without disturbing discharge pipe.

Sewage Pump Performance Curve

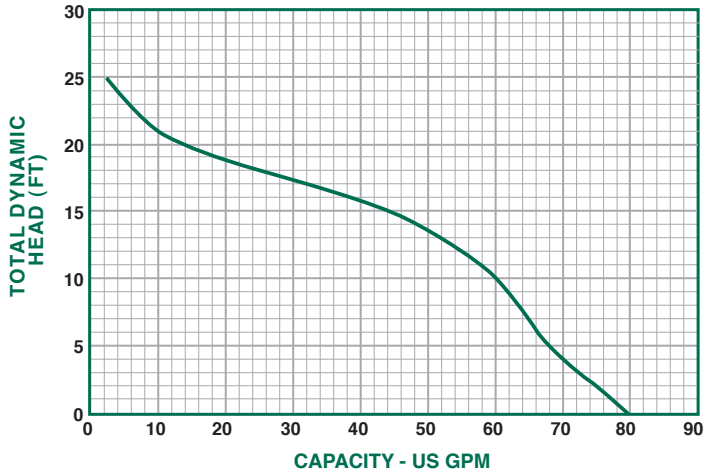

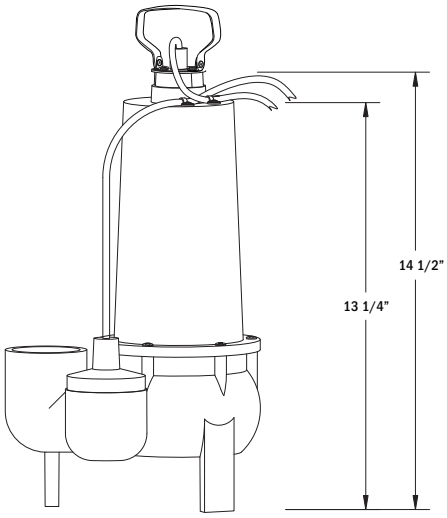

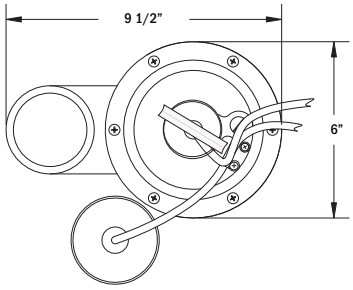

PERFORMANCE CHART						
Model	Gallons per Minute in Feet					
	0	5	10	15	20	25
5050CTSJ	80	68	60	44	13	2

SUBMERSIBLE CAST IRON SEWAGE PUMP - 2" DISCHARGE										
Model	HP	Volts	Hz	Amps	Construction	Discharge Size	Cord Length	Solids Handling	RPM	Phase
5050CTSJ	1/2	120	60	7.6	Cast Iron	2"	10'	2"	3450	1

SUBMITTAL INFORMATION

- 5050CTSJ 1/2 HP Cast iron sewage ejector with tethered float switch
- 18" x 30" durable structural foam sewage basin with 4" inlet
- 2" Full flow check valve with rubber boots
- 4" Snap-In-Hub with stainless steel clamp
- 18" structural foam split lid cover with inspection port & gasket kit
- Stainless steel fasteners for cover
- 30" Long 2" PVC stub pipe
- Non-clogging stainless steel vortex impeller

NO-LEAD: The weighted average of the wetted surface of this no-lead product contacted by consumable water contains less than one quarter of one percent (0.25%) lead.

EST. 1856 McDonald

A.Y. McDonald Mfg. Co.
P.O. Box 508
Dubuque, IA 52004-0508

Toll Free: 1-800-292-2737
Fax: 1-800-832-9296
Hours: 7:00 a.m. - 5:00 p.m., CST

sales@aymcdonald.com
www.aymcdonald.com

A.Y. McDonald considers the information on this assembly drawing correct when published. Item and option availability, including specifications, are subject to change without notice.

Submitted by: