SUBMITTAL DATA SHEET

Pump Repair Parts

303022SP Repair Parts

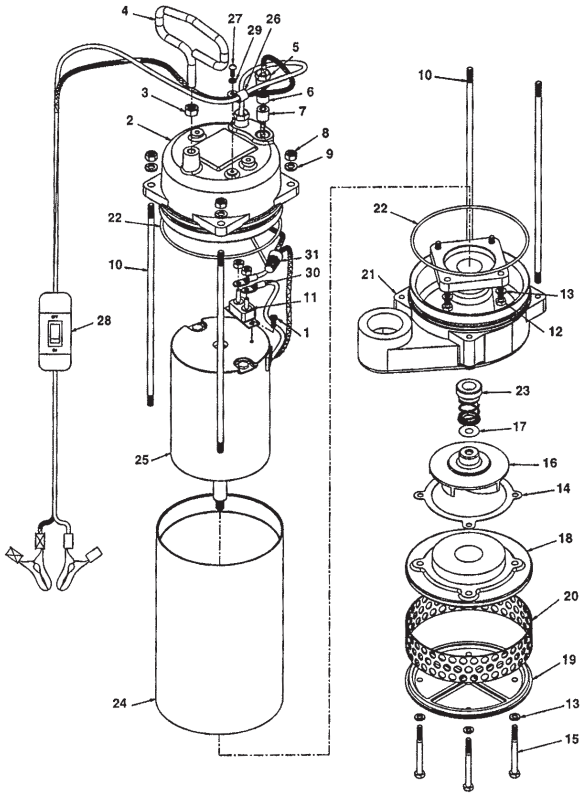

Part #	Plate #	Vender Part#		Description
6195-258	303022STSC	710-004-330	1	Self-tapping screw
6195-259	303022MTCV	258-017-157	2	Motor cover
6195-260	303022HNUT	545-005-330	3	Hex nut
6195-261	303022HNDL	405-009-000	4	Handle
6195-262	303022GLNT	543-001-162	5	Gland nut
6195-263	303022GLSP	770-007-162	6	Gland spacer
6195-264	303022SLRG	675-016-360	7	Sealing ring
6195-265	303022HXNT	545-004-330	8	Hex nut
6195-266	303022LKWS	900-004-330	9	Lock washer
6195-267	303022STUD	807-011-330	10	Stud
6195-268	303022CRBK	270-001-000	11	Circuit breaker
6195-269	303022HHCS	170-028-330	12	Hex head capscrew
6195-270	303022LWSR	900-001-330	13	Lock washer
6195-271	303022CSGS	360-001-440	14	Casing gasket
6195-272	303022HCSR	170-003-115	15	Hex head capscrew
6195-176	303022MPLR	444-001-010	16	Impeller
6195-179	303022SHIM	740-001-115	17	Shim
6195-273	303022SCTC	258-001-157	18	Suction cover

Part #	Plate #	Vender Part#		Description
6195-274	303022STRN	612-001-156	19	Strainer plate
6195-177	303022SCRN	700-001-330	20	Strainer screen
6195-275	303022CSVL	181-001-155	21	Casing volute 1 1/2 NPT
6195-276	303022RING	560-022-360	22	O-ring
6195-178	303022SEAL	720-005-000	23	Seal
6195-277	303022MTR	525-005-000	25	Motor
6195-278	303022CBCL	200-003-000	26	Cable clamp
6195-279	303022MCSC	706-007-330	27	Machine screw
6195-280	303022PWRC	150-036-000	28	Power cable assembly
6195-281	303022LCKW	900-002-330	29	Lock washer
6195-282	303022CMPL	510-003-000	30	Compression lug
6195-181	303022CK	475-220-000		Cable update kit
6195-283	303022SSKT	475-132-000		Shell & stud kit
6195-180	303022EYE	321-001-330		Eye bolt
6195-182	303022HK	475-238-000		Handle update kit
6195-154	303022SCR	706-006-330		Handle screw

NO-LEAD: The weighted average of the wetted surface of this no-lead product contacted by consumable water contains less than one quarter of one percent (0.25%) lead.

EST. 1856 McDonald

A.Y. McDonald Mfg. Co.
P.O. Box 508
Dubuque, IA 52004-0508

Toll Free: 1-800-292-2737
Fax: 1-800-832-9296
Hours: 7:00 a.m. - 5:00 p.m., CST

sales@aymcdonald.com
www.aymcdonald.com

A.Y. McDonald considers the information on this assembly drawing correct when published. Item and option availability, including specifications, are subject to change without notice.

Submitted by: