SUBMITTAL DATA SHEET

Pump Repair Parts

1000 / 1500 Repair Parts

		1/2 HP 1050 & 1550	3/4HP 1075 & 1575	1 HP 1010 & 1510	3/4HP 1075SW & 1575SW	1 HP 1010SW & 1510SW	1 1/2 HP 1015SW & 1515SW
	Description	Part #	Part #	Part #	Part #	Part #	Part #
1	Motor	6127-154	6127-154	6127-160	6127-154	6127-160	6127-156
9	Brass Impeller	6316-210	6316-209	6316-208	6316-210	6316-209	6316-208
9	Plastic Impeller	6316-252	6316-251	6316-250	6316-252	6316-251	6316-250

Reference page 37 for diagrams of 1000 & 1500 Series pumps.

Part #		Description
3129-394	2	1000 Series motor cover (Magnetek)
6127-334	3	Shaft assembly
6316-241	4	Adapter
6152-207	5	Body Gasket
3100-529	6 7	Capscrews
6422-103	8	Shaft Seal
6316-216	10	1st Diffuser
3121-509	11	Drive pin (supplied w/1 duffuser)
6316-217	12	2nd diffuser
6127-335	15	Diffuser cover assembly *
6421-124	16	Flange assembly+
3100-545	17	Diffuser capscrews

Part #		Description
6127-336	18	Impeller spacer kit*
3104-131	19	Impeller locknut
6316-228	20	Impeller Key
6316-213	21	Cover gasket
6316-234	22	1000 Series body assembly
6316-235	23	1500 Series body assembly
6127-248	24	1500 Series pump foot
3100-530	25	Pump foot capscrew
5999-902	26	Series vent cock (1000 Series)
3126-103	26	1/8” plug
6316-227		Diffuser Cover
5999-842		Impeller spacer 1500/1000 Series

*Includes body gasket (5) and cover gasket (21).
+For 1000 series, sold separately.

Shallow Well Jet Packages

		Venturi Assembly
Models	HP	Part#
659 JP	3/4 HP	6155-314
658JP	1 HP	6155-316
652JP	1 1/2 HP	6155-212

Deep Well Jet Package

2003 & Newer	Venturi	Nozzle
Models	Part#	Part#
7109MP & 7125MP	6414-207	5999-911
7110MP & 7126MP	6413-203	6128-201
7111MP & 7127MP	6421-217	5999-911
7112MP & 7128MP	6421-219	5999-913
7113MP & 7129MP	6414-208	5999-912
7114MP & 7130MP	6414-208	5999-911

Miscellaneous - Pressure Regulator

Model	Part #	Description
--	5999-863	Body assembly
--	6152-213	Adjustment screw
--	6453-204	Diaphragm for reg. valve
--	6453-224	Regulator spring

NO-LEAD: The weighted average of the wetted surface of this no-lead product contacted by consumable water contains less than one quarter of one percent (0.25%) lead.

EST. 1856 McDonald

A.Y. McDonald Mfg. Co.
P.O. Box 508
Dubuque, IA 52004-0508

Toll Free: 1-800-292-2737
Fax: 1-800-832-9296
Hours: 7:00 a.m. - 5:00 p.m., CST

sales@aymcdonald.com
www.aymcdonald.com

A.Y. McDonald considers the information on this assembly drawing correct when published. Item and option availability, including specifications, are subject to change without notice.

Submitted by:

SUBMITTAL DATA SHEET

Pump Repair Parts

1000 / 1500 Repair Parts

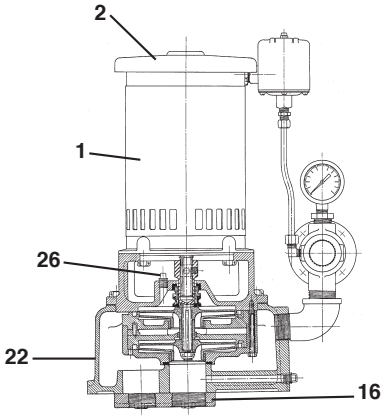

SERIES 1000 - VERTICAL

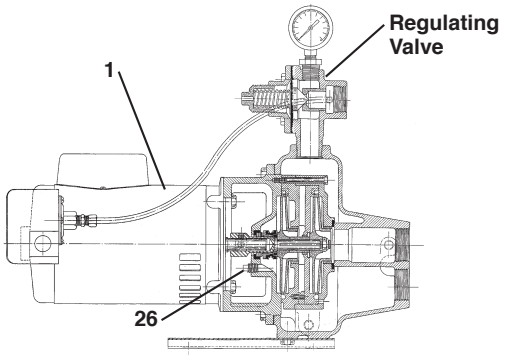

SERIES 1500 - HORIZONTAL

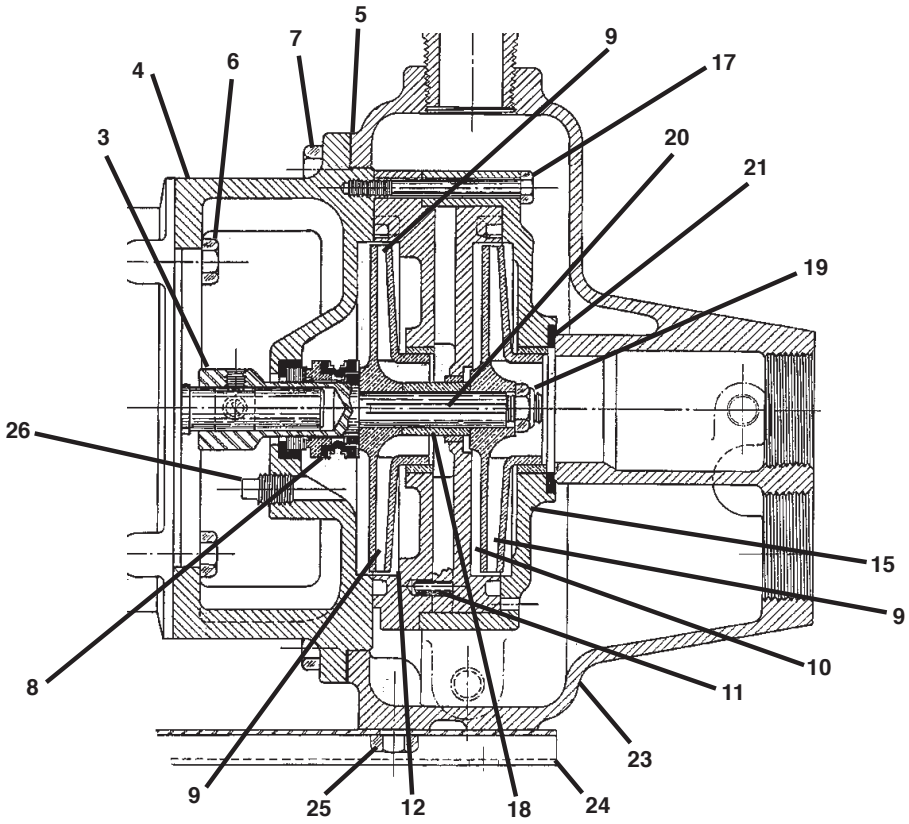

NO-LEAD: The weighted average of the wetted surface of this no-lead product contacted by consumable water contains less than one quarter of one percent (0.25%) lead.

EST. 1856 McDonald

A.Y. McDonald Mfg. Co.
P.O. Box 508
Dubuque, IA 52004-0508

Toll Free: 1-800-292-2737
Fax: 1-800-832-9296
Hours: 7:00 a.m. - 5:00 p.m., CST

sales@aymcdonald.com
www.aymcdonald.com

A.Y. McDonald considers the information on this assembly drawing correct when published. Item and option availability, including specifications, are subject to change without notice.

Submitted by: