SUBMITTAL DATA SHEET

No-Lead Low Pressure Valves
Boiler Drain – 72004

FNPT X G.H.T.

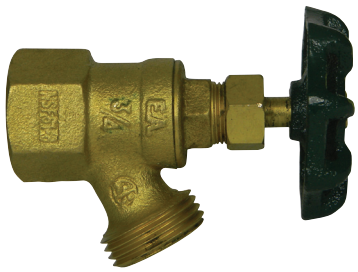

A.Y. McDonald Mfg. Co. No-Lead Low Pressure Valves are constructed from heavy duty no-lead brass and are recommended for residential and commercial applications and positive shut-off with various inlet configurations.

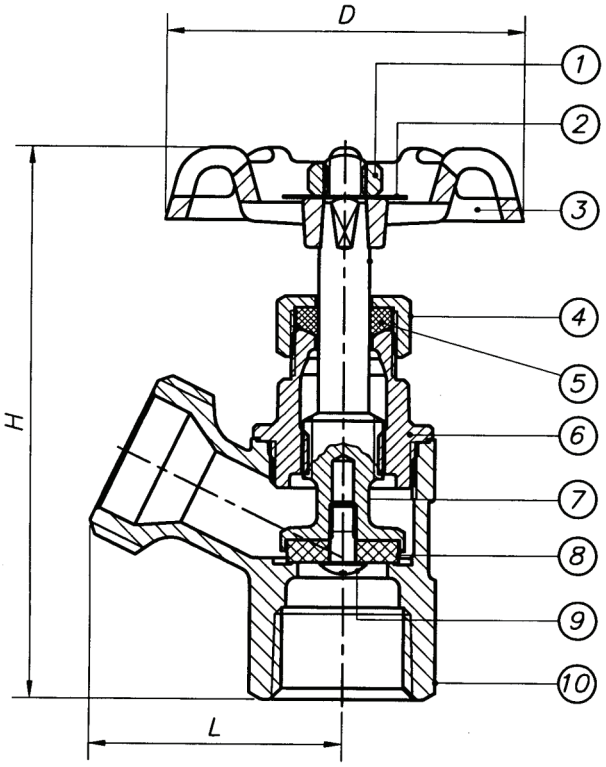

Dimensions

Size	D	H	L
1/2”	2.09	3.35	1.46
3/4”	2.09	3.35	1.46

Materials

No.	Part	Material
1	Wheel Nut	Steel
2	Name Plate	Aluminum
3	Hand Wheel	Cast Iron
4	Packing Nut	No-Lead Brass
5	Gland Packing	Rubber
6	Bonnet	No-Lead Brass
7	Stem	No-Lead Brass
8	Seat Packing	Rubber
9	Seat Screw	No-Lead Brass
10	Body	No-Lead Brass

SUBMITTAL INFORMATION

- 125 WOG
- Sizes: 1/2”, 3/4”
- Complies with NSF/ANSI 372-2010

NO-LEAD: The weighted average of the wetted surface of this no-lead product contacted by consumable water contains less than one quarter of one percent (0.25%) lead.

A.Y. McDonald Mfg. Co.
P.O. Box 508
Dubuque, IA 52004-0508

Toll Free: 1-800-292-2737
Fax: 1-800-832-9296
Hours: 7:00 a.m. - 5:00 p.m., CST

sales@aymcdonald.com
www.aymcdonald.com

A.Y. McDonald considers the information on this assembly drawing correct when published. Item and option availability, including specifications, are subject to change without notice.

Submitted by: