# SUBMITTAL DATA SHEET

## NL Ball Style Meter Stop – 76101X ¾

FNPT x CR Box



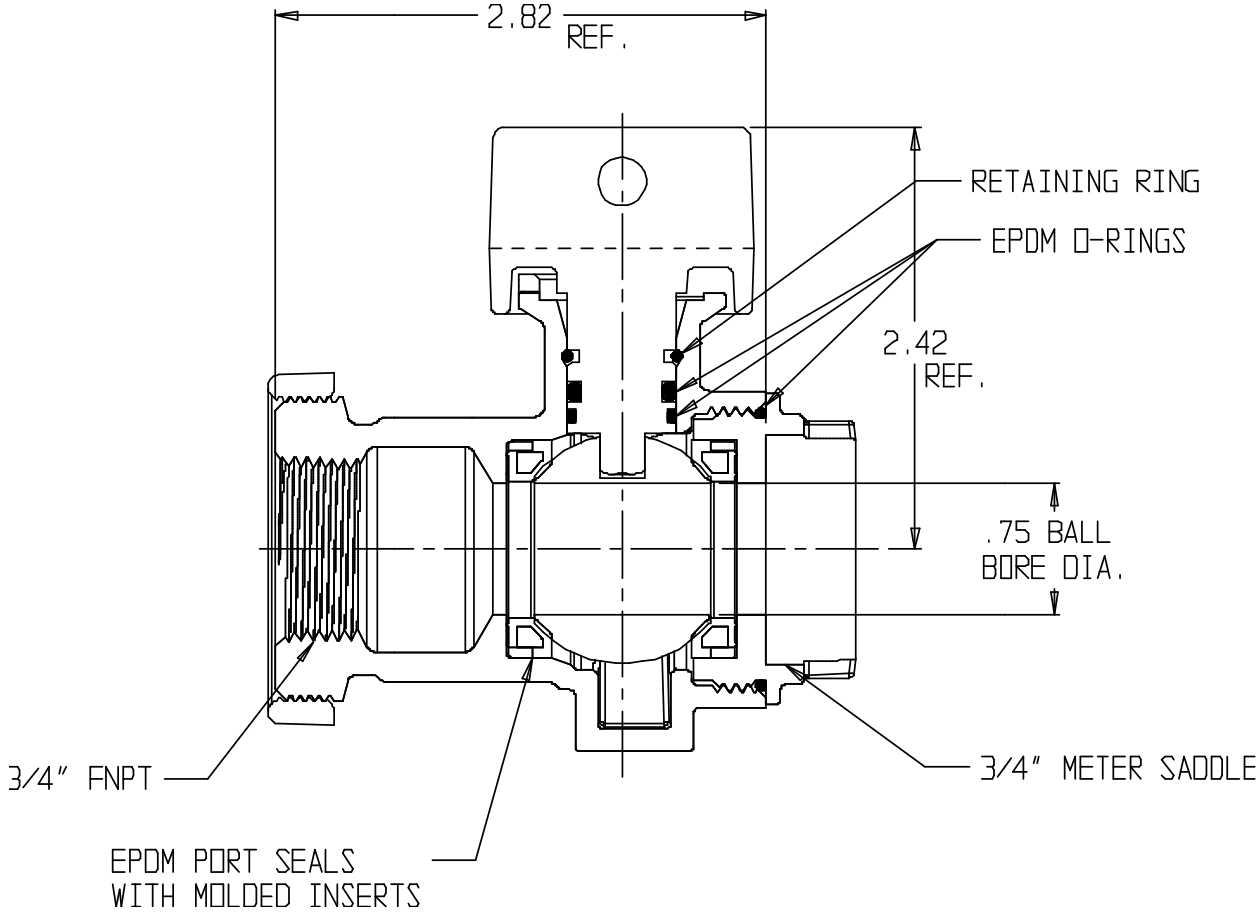


### SUBMITTAL INFORMATION

- Manufactured in compliance with ANSI/AWWA C800 (latest revision)
- Brass components in contact with potable water conform to ASTM B584, UNS C89833 (latest revision) and identified with "NL"
- Certified to NSF/ANSI 61 and NSF/ANSI 372
- Brass components not in contact with potable water conform to ASTM B62 and ASTM B584, UNS C83600 -85-5-5-5 (latest revision)
- PTFE coated brass ball
- Rated for 300 PSIG water pressure
- Blow out proof EPDM port seals
- End piece joint sealed with an EPDM o-ring and thread locker


**A.Y. McDonald Mfg. Co.**
P.O. Box 508
Dubuque, IA 52004-508

**Toll Free:** 1-800-292-2737
**Fax:** 1-800-832-9296
**Hours:** 7:00 a.m. – 5:00 p.m., CST

sales@aymcdonald.com
www.aymcdonald.com



A.Y. McDonald considers the information on this assembly drawing correct when published. Item and option availability, including specifications, are subject to change without notice.


**Submitted by:**