SUBMITTAL DATA SHEET

Pit Setter – 80-C2 24 X 2.00

Closed Cell Foam Insulating Cushions

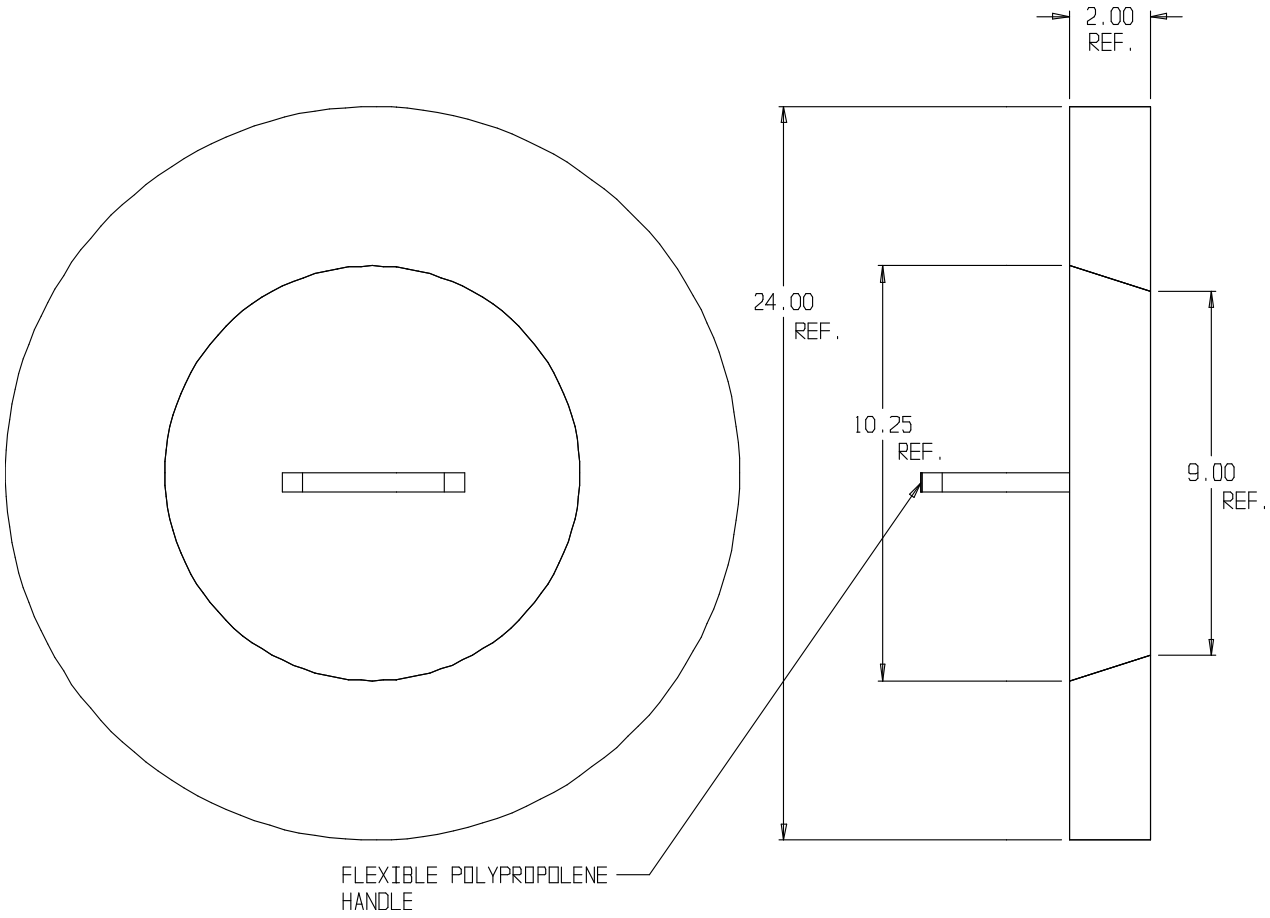

SUBMITTAL INFORMATION

- Manufactured in compliance with ANSI/AWWA C800 (latest revision)
- Brass components conform to ASTM B62 and ASTM B584, UNS C83600 -85-5-5-5 (latest revision)
- Copper tubing made in compliance with ASTM B75 or B88, UNS C12200 (latest revision)
- Lead free solder joints
- Heavy wall PVC shell
- Large wrench flats provided for proper installation

A.Y. McDonald Mfg. Co.
P.O. Box 508
Dubuque, IA 52004-508

Toll Free: 1-800-292-2737
Fax: 1-800-832-9296
Hours: 7:00 a.m. – 5:00 p.m., CST

sales@aymcdonald.com
www.aymcdonald.com

A.Y. McDonald considers the information on this assembly drawing correct when published. Item and option availability, including specifications, are subject to change without notice.

Submitted by: