SUBMITTAL DATA SHEET

Sump, Sewage, & Effluent Pumps

DuraMAC™ | Guardian

5050CTSJPAC24 Sewage Pump



3 YEAR LIMITED WARRANTY

See Pumps & Accessories Price List for Limited Warranty details.

This pre-assembled 24" x 24" simplex sewage package is designed for use in any residential sewage application with its 45 gallon capacity.

Sewage Pump Performance Curve

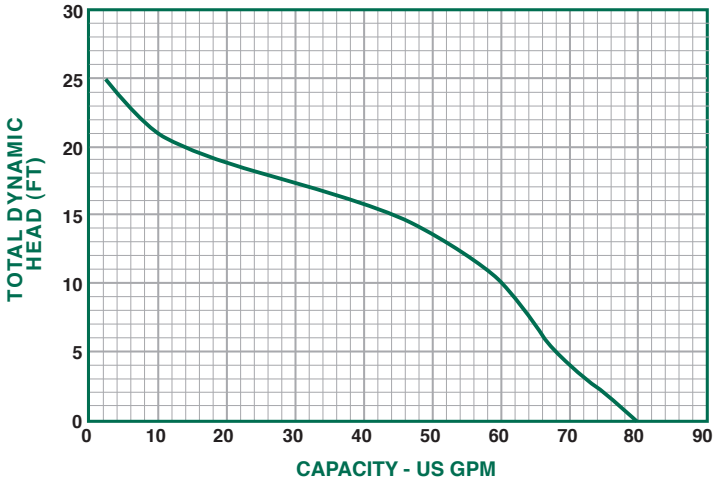

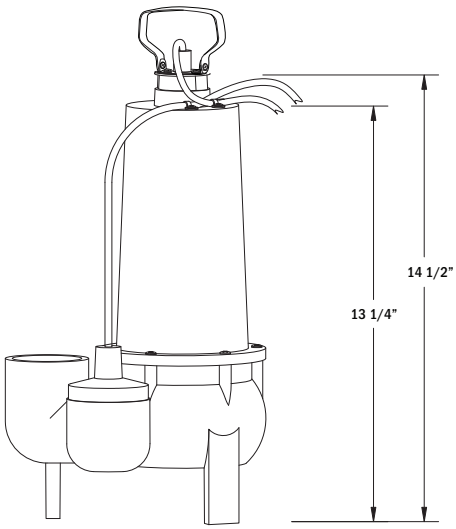

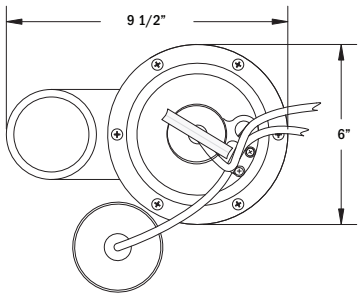

PERFORMANCE CHART						
Model	Gallons per Minute in Feet					
	0	5	10	15	20	25
5050CTSJ	80	68	60	44	13	2

SUBMERSIBLE CAST IRON SEWAGE PUMP - 2" DISCHARGE

Model	HP	Volts	Hz	Amps	Construction	Discharge Size	Cord Length	Solids Handling	RPM	Phase
5050CTSJ	1/2	120	60	7.6	Cast Iron	2"	10'	2"	3450	1

SUBMITTAL INFORMATION

- 5050CTSJ 1/2 HP sewage pump with tethered switch
- 24" structural foam cover with gasket kit
- 24" x 24" durable structural foam sewage basin with 4" inlet
- 2" Full Flow Check Valve with Rubber Boots
- 4" Snap-In-Hub with stainless steel clamp
- Non-clogging stainless steel vortex impeller

NO-LEAD: The weighted average of the wetted surface of this no-lead product contacted by consumable water contains less than one quarter of one percent (0.25%) lead.

A.Y. McDonald Mfg. Co.
P.O. Box 508
Dubuque, IA 52004-0508

Toll Free: 1-800-292-2737
Fax: 1-800-832-9296
Hours: 7:00 a.m. - 5:00 p.m., CST

sales@aymcdonald.com
www.aymcdonald.com

A.Y. McDonald considers the information on this assembly drawing correct when published. Item and option availability, including specifications, are subject to change without notice.

Submitted by: