SUBMITTAL DATA SHEET

Sump, Sewage, & Effluent Pumps

DuraMAC™ | Guardian

5030CVSPK Sump Pump



5 YEAR LIMITED WARRANTY

See Pumps & Accessories Price List for Limited Warranty details.

This pre-assembled sink drain system has a six gallon capacity basin. It is great for laundry tubs, washing machines, wet bars, and dehumidifiers. For easy installation, it comes pre-assembled.

Sump Pump Performance Curve

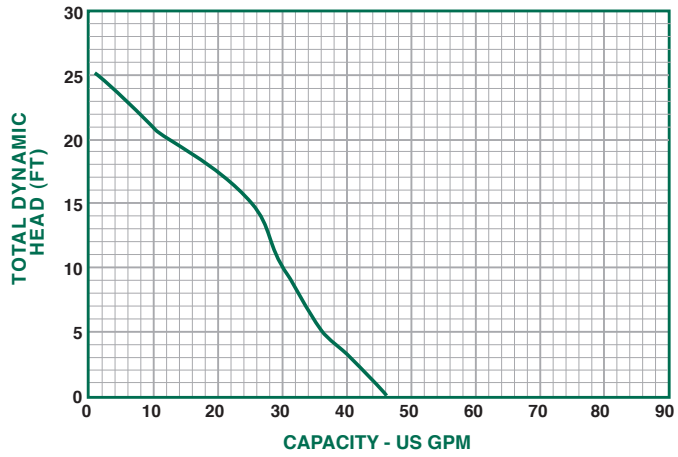

PERFORMANCE CHART						
Model	Gallons per Minute in Feet					
	0	5	10	15	20	25
5030CVSP	46	36	30	25	12	1

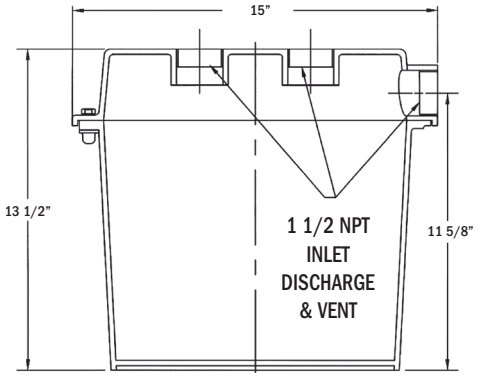

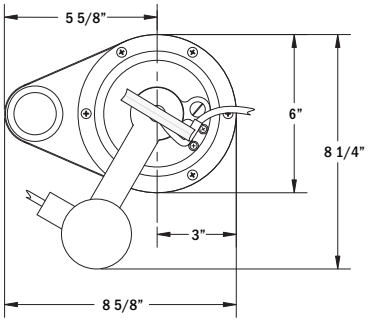

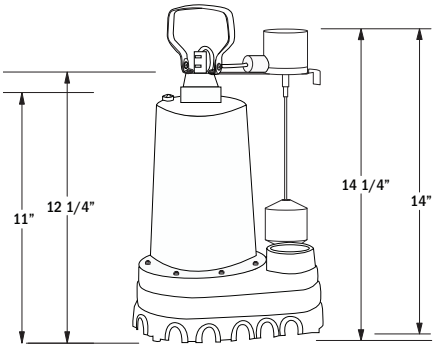

SUBMERSIBLE CAST IRON SUMP PUMP - 1 1/2" DISCHARGE										
Model	HP	Volts	Hz	Amps	Construction	Discharge Size	Cord Length	Solids Handling	RPM	Phase
5030CVSP	3/10	120	60	4.1	Cast Iron	1 1/2"	10'	3/8"	3450	1

SUBMITTAL INFORMATION

- 5030CVSP 3/10 HP cast iron sump pump with vertical switch
- 15" x 13.5" durable structural foam basin with 1 1/2" FNPT inlet
- 1 1/2" Full Flow Check Valve with Rubber Boots
- Structural foam cover with 1 1/2" FNPT discharge and vent
- Non-clogging stainless steel impeller

NO-LEAD: The weighted average of the wetted surface of this no-lead product contacted by consumable water contains less than one quarter of one percent (0.25%) lead.

EST. 1856 McDonald

A.Y. McDonald Mfg. Co.
P.O. Box 508
Dubuque, IA 52004-0508

Toll Free: 1-800-292-2737
Fax: 1-800-832-9296
Hours: 7:00 a.m. - 5:00 p.m., CST

sales@aymcdonald.com
www.aymcdonald.com

A.Y. McDonald considers the information on this assembly drawing correct when published. Item and option availability, including specifications, are subject to change without notice.

Submitted by: