SUBMITTAL DATA SHEET

Radiator Valves
Convector Steam Angle Valve – 4433T

FNPT Union x FNPT



A.Y. McDonald Mfg. Co. Radiator Valves are constructed of heavy duty cast brass and feature a non-rising stem design. They provide positive shut off in steam and hot water applications.

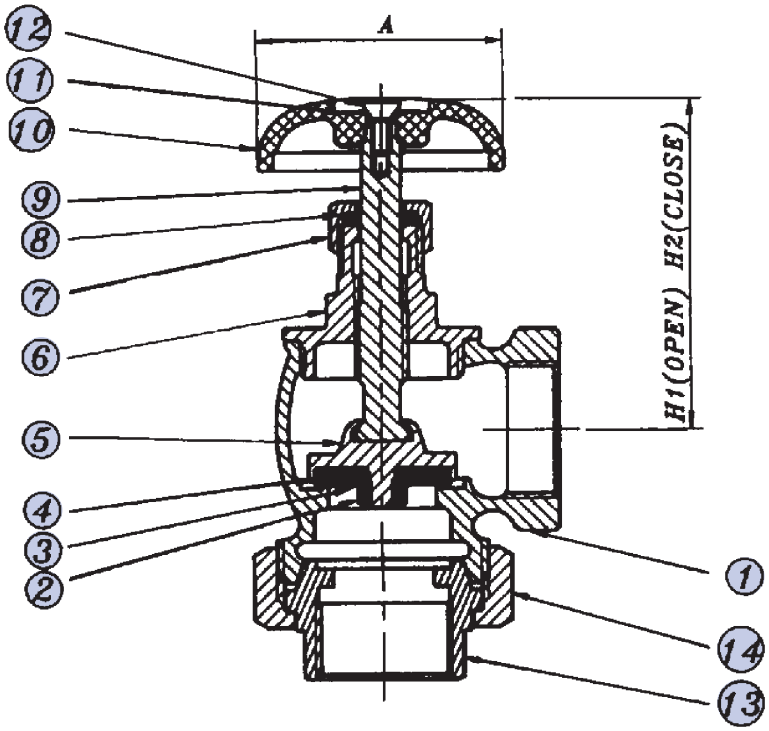

Dimensions

Size	A	H1	H2
1”	2.26	3.55	2.96
1 1/4”	2.26	3.98	3.35

Materials

No.	Part	Material
1	Body	Bronze
2	Nut	Brass
3	Washer	Brass
4	Seat	Buna-N
5	Retainer	Brass
6	Bonnet	Bronze
7	Packing	Teflon
8	Packing Nut	Brass
9	Stem	Brass
10	Handwheel	Phenolic Resin
11	Nameplate	Aluminum
12	Screw	Brass
13	Tailpiece	Bronze
14	Union Nut	Bronze

SUBMITTAL INFORMATION

- 15 WSP - 60 PSI Hot Water
- Sizes: 1” - 1 1/4”
- Bronze Construction

Non-Potable Use Only

A.Y. McDonald Mfg. Co.
P.O. Box 508
Dubuque, IA 52004-0508

Toll Free: 1-800-292-2737
Fax: 1-800-832-9296
Hours: 7:00 a.m. - 5:00 p.m., CST

sales@aymcdonald.com
www.aymcdonald.com

A.Y. McDonald considers the information on this assembly drawing correct when published. Item and option availability, including specifications, are subject to change without notice.

Submitted by: