SUBMITTAL DATA SHEET

Sump, Sewage, & Effluent Pumps

DuraMAC™ | Guardian

5025PTSPCWB Sump Pump



3 YEAR LIMITED WARRANTY

See Pumps & Accessories Price List for Limited Warranty details.

This pre-assembled clear water basin package would be great for new home construction that requires both a sump pump and basin to be installed.

Sump Pump Performance Curve

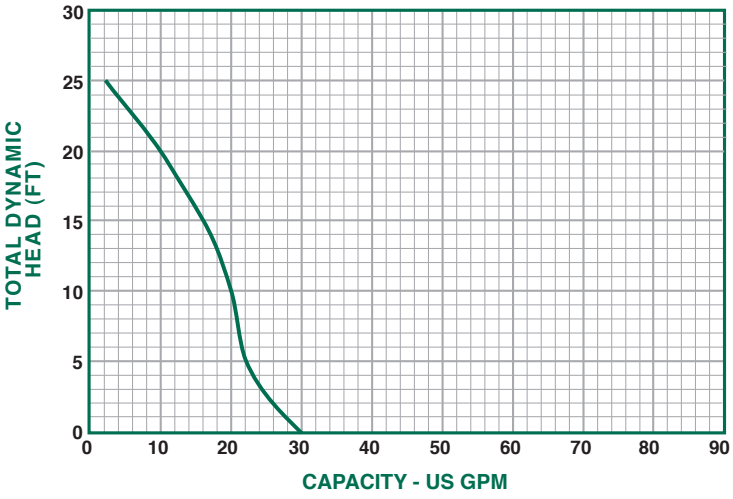

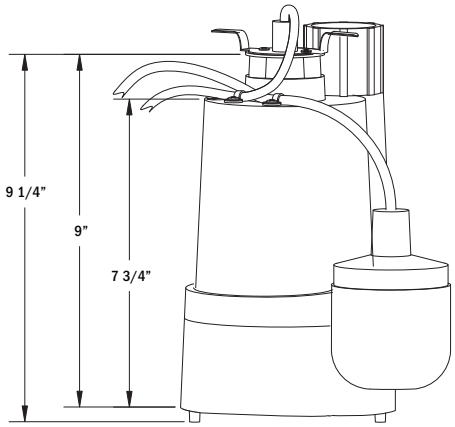

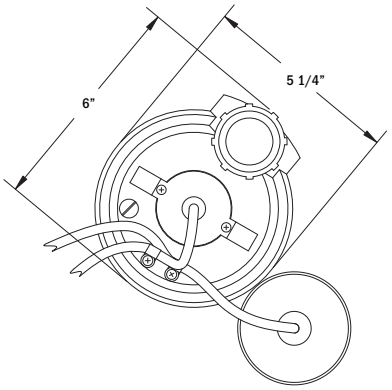

PERFORMANCE CHART

Model	Gallons per Minute in Feet					
	0	5	10	15	20	25
5030CVSP	46	36	30	25	12	1

SUBMERSIBLE PLASTIC SUMP PUMP - 1 1/2" DISCHARGE

Model	HP	Volts	Hz	Amps	Construction	Discharge Size	Cord Length	Solids Handling	RPM	Phase
5025PTSP	1/4	120	60	3.8	Thermoplastic	1 1/2"	10'	1/8"	3450	1

SUBMITTAL INFORMATION

- 5025PTSP 1/4 HP Thermoplastic sump pump with tethered float switch
- 18" x 24" Structual foam basin with slotted cover
- 1 1/2" Full flow check valve with rubber boots
- 2' 1 1/2" PVC pipe
- Clog resistant impeller

NO-LEAD: The weighted average of the wetted surface of this no-lead product contacted by consumable water contains less than one quarter of one percent (0.25%) lead.

A.Y. McDonald Mfg. Co.
P.O. Box 508
Dubuque, IA 52004-0508

Toll Free: 1-800-292-2737
Fax: 1-800-832-9296
Hours: 7:00 a.m. - 5:00 p.m., CST

sales@aymcdonald.com
www.aymcdonald.com

A.Y. McDonald considers the information on this assembly drawing correct when published. Item and option availability, including specifications, are subject to change without notice.

Submitted by: