SUBMITTAL DATA SHEET

Dewatering Pumps

Electric & DC Powered | Engine Driven

3” & 4” Engine Driven | Trash Pump

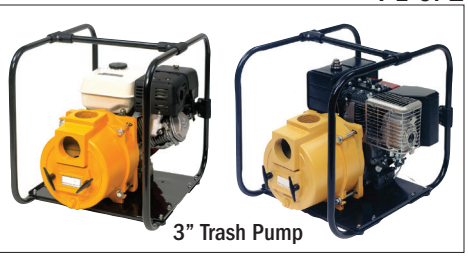

3” Trash Pump

The A.Y. McDonald line of engine driven trash pumps are constructed of heavy duty sand cast components featuring removable/replaceable cast iron volutes, impellers, and wearplates. Simple cleanout design permits easy removal of trash and debris without disconnecting hoses.

Pumps are available with side valve or overhead valve engines from various engine manufacturers. An electric start option is available on 4” model. A.Y. McDonald engine driven trash pumps are reliable, cost effective, and low maintenance.



04S13HPV
4” Trash Pump

Applications

Designed for applications which require high flow efficiency and solids handling capability. For use with non-flammable liquids which are compatible with pump component materials.

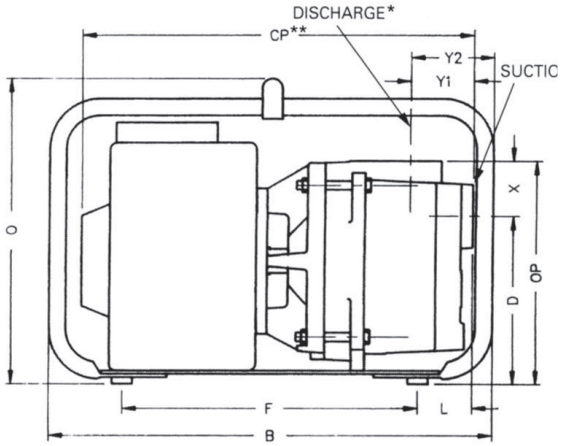

3” Models

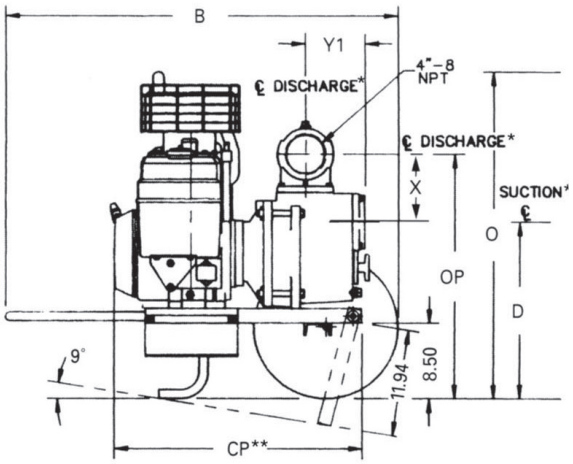

4” Models

Dimensions

Model#	Width	B	CP**	D	F	L	O	OP	X	Y1	Y2	Suct.	Disch.
03S8IR	21.3	27.3	25.5	11.0	13.3	6.0	23.8	14.5	3.5	5.0	6.0	3"	3"
03S9HR	21.3	27.3	25.5	11.0	13.3	6.0	23.8	14.5	3.5	5.0	6.0	3"	3"
04S13HPV	37.5	44.5	27.4	19.6	N/A	N/A	36.6	27.5	7.8	6.5	N/A	4"	4"

(*) Standard NPT (female) pipe thread.

(**) This dimension may vary due to engine manufacturer's specifications.

NOTE: Dimensions have a tolerance of ± 1/8".

SUBMITTAL INFORMATION

- Cast aluminum with cast iron wearparts construction
- Viton®/silicon carbide mechanical seal & Buna-N o-ring
- 3” & 4” NPT port sizes
- Self-priming up to 20’
- Engine options: Briggs & Stratton, or Honda
- Available in 8, 9 and 13 HP engines
- Pumps include heavy duty base or roll frame
- Suction strainer included
- Solids handling up to 2” diameter

NO-LEAD: The weighted average of the wetted surface of this no-lead product contacted by consumable water contains less than one quarter of one percent (0.25%) lead.

A.Y. McDonald Mfg. Co.
P.O. Box 508
Dubuque, IA 52004-0508

Toll Free: 1-800-292-2737
Fax: 1-800-832-9296
Hours: 7:00 a.m. - 5:00 p.m., CST

sales@aymcdonald.com
www.aymcdonald.com

A.Y. McDonald considers the information on this assembly drawing correct when published. Item and option availability, including specifications, are subject to change without notice.

Submitted by:

SUBMITTAL DATA SHEET

Dewatering Pumps

Electric & DC Powered | Engine Driven

3” & 4” Engine Driven | Trash Pump

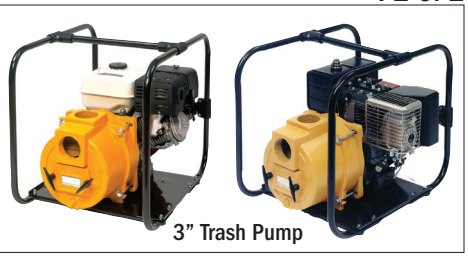

3” Trash Pump



04S13HPV
4” Trash Pump

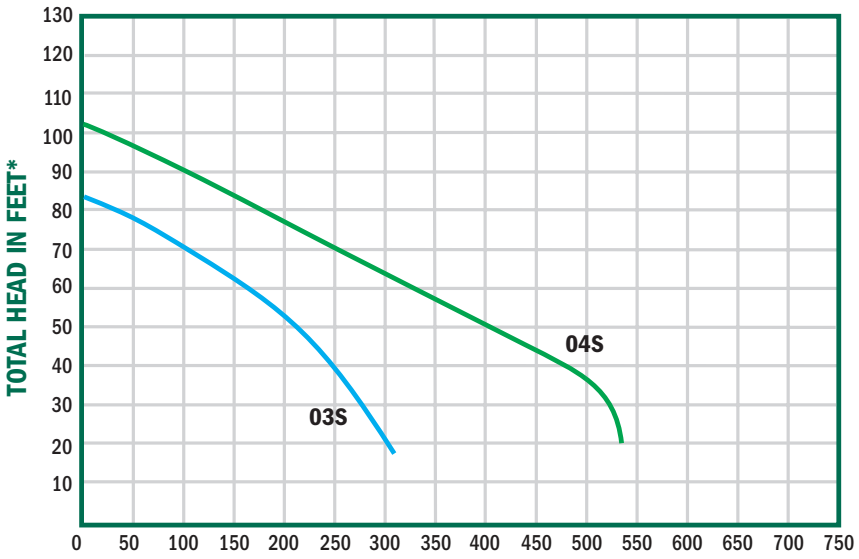

CAPACITY IN US GALLONS PER MINUTE @ 3600 RPM

*CONVERT TO PSI, DIVIDE BY 2.31 | LIQUID WATER SPECIFIC GRAVITY 1.0

3” Engine Driven Trash Pumps

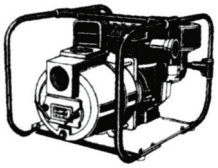

Model #	Driver	Shaft Seal	Ship WT.	Run Time	Tank Size
03S8IR	8 HP Briggs & Stratton 1350*	Viton/Sic/Sic**	143 lbs.	90 min.	4.0 qt.
03S9HR	9 HP Honda GX270*	Viton/Sic/Sic**	158 lbs.	100 min.	6.4 qt.

Solids Handling - 1 1/2” diameter

4” Premium Engine Driven Trash Pumps

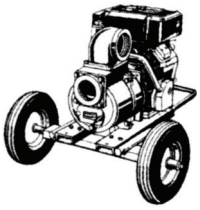

Model #	Driver	Shaft Seal	Ship WT.	Run Time	Tank Size
04S13HPV	13 HP Honda GX390*†	Viton/Sic/Sic**	299 lbs.	80 min.	6.9 qt.

Solids Handling - 2” diameter
*Oil alert included
**SIC = Silicon Carbide
†12V DC electric start (battery not included)

WARNING: Do not use in explosive atmosphere or for pumping volatile flammable liquids.

NO-LEAD: The weighted average of the wetted surface of this no-lead product contacted by consumable water contains less than one quarter of one percent (0.25%) lead.

EST. 1856 McDonald

A.Y. McDonald Mfg. Co.
P.O. Box 508
Dubuque, IA 52004-0508

Toll Free: 1-800-292-2737
Fax: 1-800-832-9296
Hours: 7:00 a.m. - 5:00 p.m., CST

sales@aymcdonald.com
www.aymcdonald.com

A.Y. McDonald considers the information on this assembly drawing correct when published. Item and option availability, including specifications, are subject to change without notice.

Submitted by: