# SUBMITTAL DATA SHEET

## NL Ball Style Meter Stop – 74642B-55

-55 IP Compression x Meter

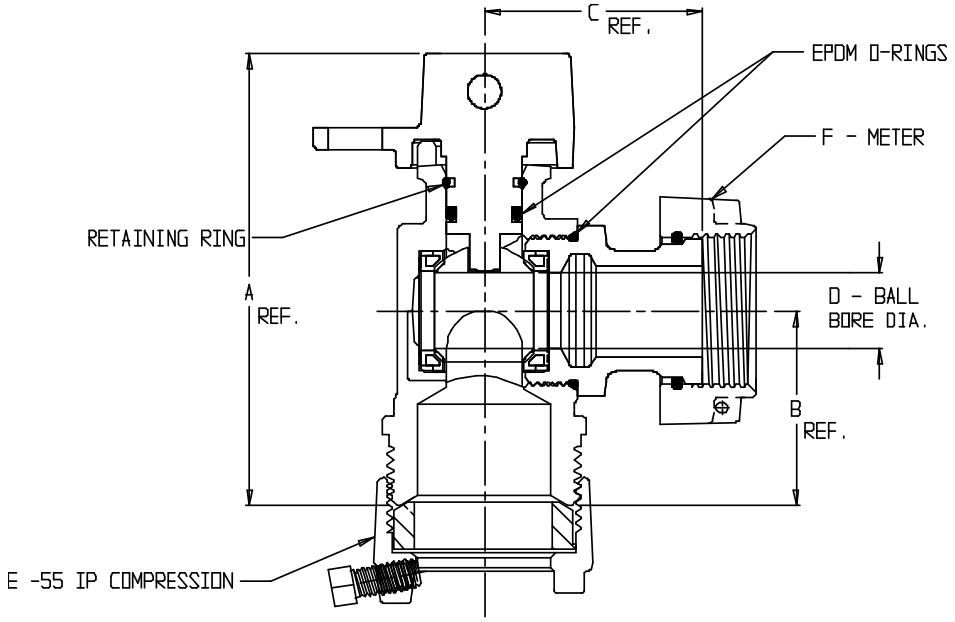


| PLATE NO. | SIZE | A | B | C | D | E | F |
|---|---|---|---|---|---|---|---|
| 74642B-55 | 5/8 | 3.72 | 1.60 | 1.80 | .63 | 3/4 | 5/8 |
| 74642B-55 | 3/4 | 3.72 | 1.60 | 1.80 | .63 | 3/4 | 5/8 X 3/4 OR 3/4 |
| 74642B-55 | 1 | 4.97 | 2.55 | 1.85 | .75 | 1 | 1 |

### SUBMITTAL INFORMATION

- Manufactured in compliance with ANSI/AWWA C800 (latest revision)
- Brass components in contact with potable water conform to ASTM B584, UNS C89833 (latest revision) and identified with "NL"
- Certified to NSF/ANSI 61 and NSF/ANSI 372
- Brass components not in contact with potable water conform to ASTM B62 and ASTM B584, UNS C83600 -85-5-5-5 (latest revision)
- PTFE coated brass ball
- Rated for 300 PSIG water pressure
- Blow out proof EPDM port seals
- End piece joint sealed with an EPDM o-ring and thread locker
- Insert stiffeners required on all flexible plastic connections

**A.Y. McDonald Mfg. Co.**
P.O. Box 508
Dubuque, IA 52004-508

**Toll Free:** 1-800-292-2737
**Fax:** 1-800-832-9296
**Hours:** 7:00 a.m. – 5:00 p.m., CST

sales@aymcdonald.com
www.aymcdonald.com

A.Y. McDonald considers the information on this assembly drawing correct when published. Item and option availability, including specifications, are subject to change without notice.

**Submitted by:**